GSY7771,5,6,8ACL
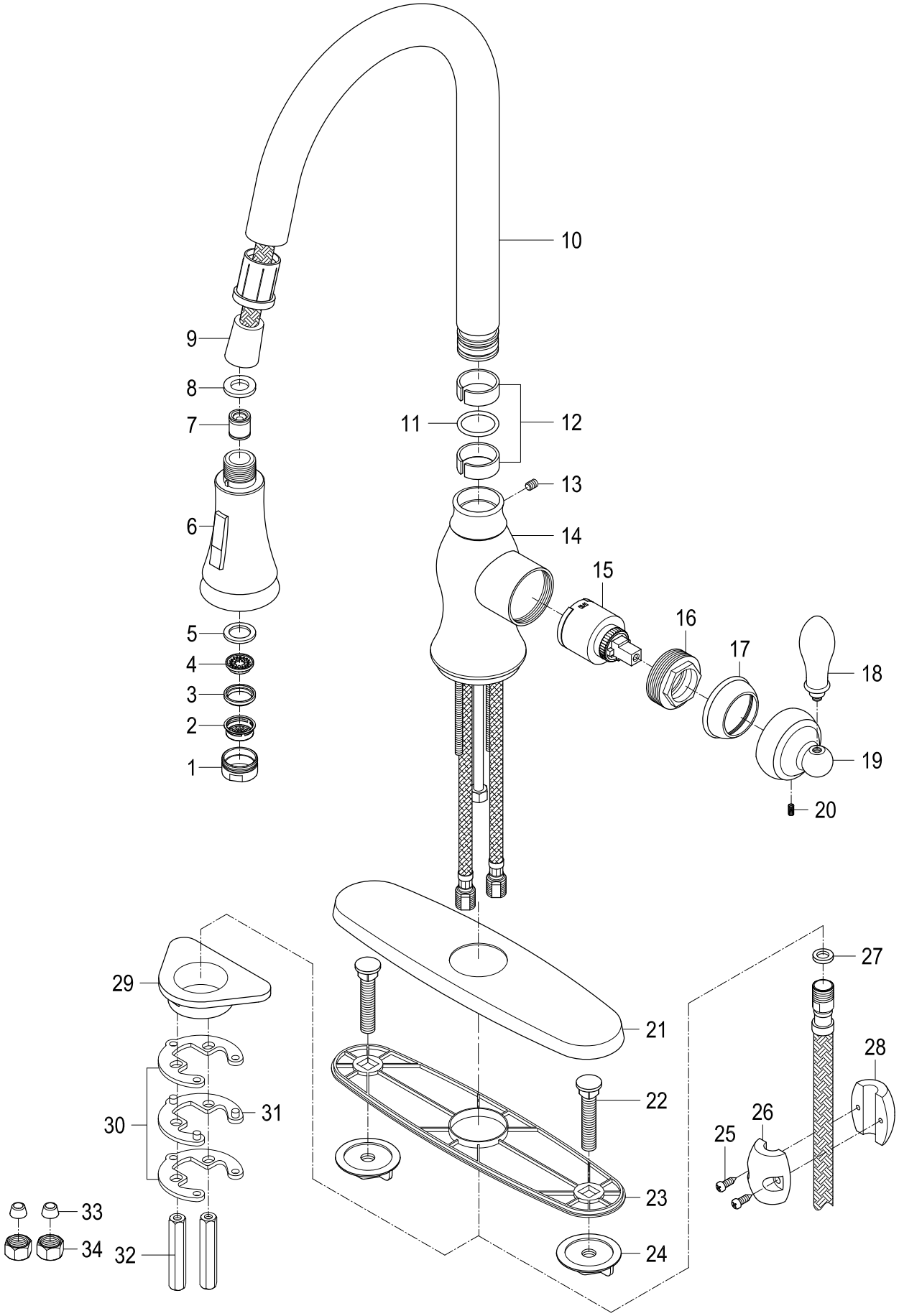
Single Handle Pull-Down Kitchen Faucet