KS7161,2,5,8TAL

Widespread Lavatory Faucet With Brass Pop-Up

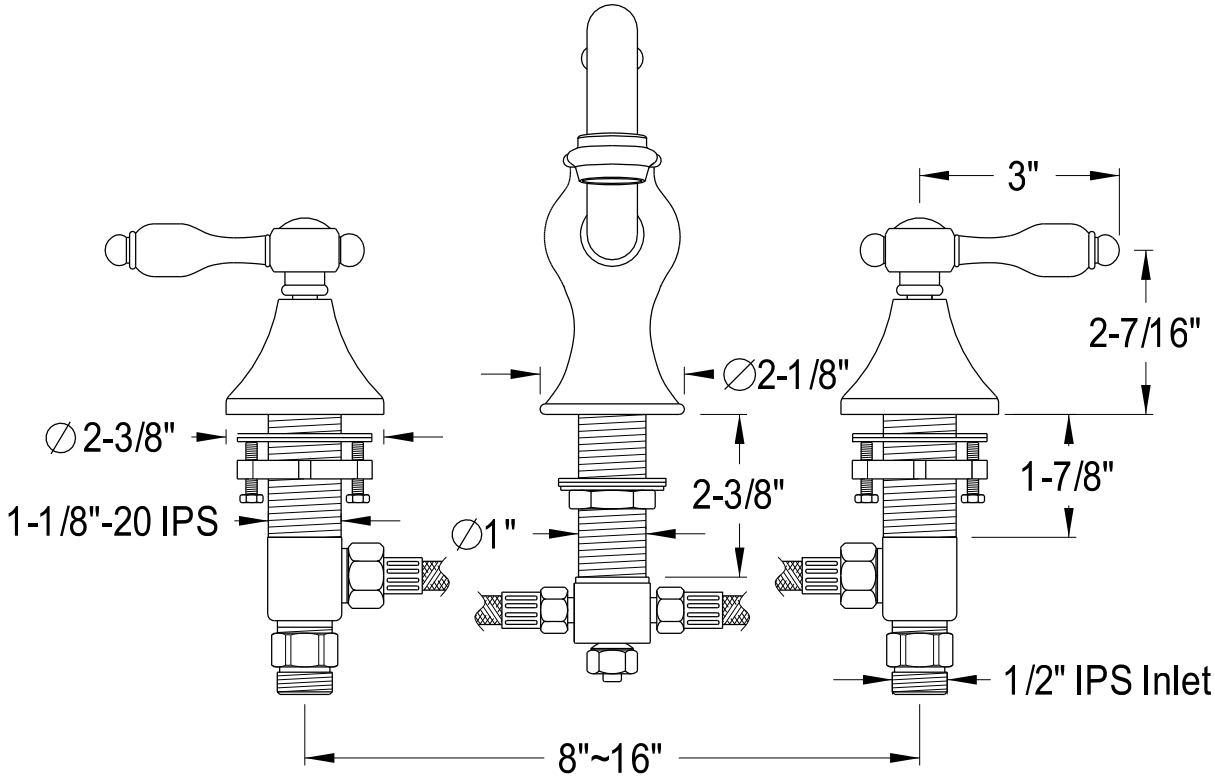

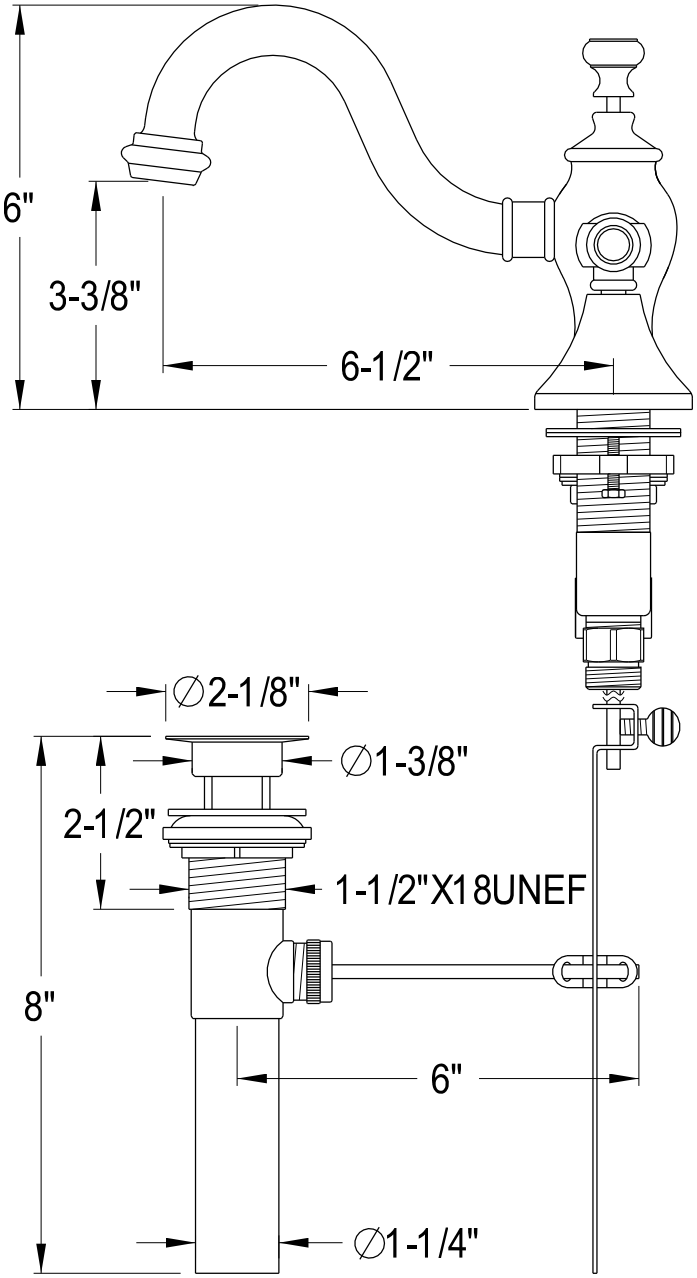

Ref# KS7161,2,5,8TAL | 2016-04-B