KALLISTA®

Script® Sink Faucet, Low Spout, Enamel Handles

P25054

FEATURES

- *Solid metal construction for durability and reliability*
- *Two-handle, widespread lavatory faucet for 8" (203 mm) - 16" (406 mm) centers*
- *Quarter-turn washerless ceramic disc valves*
- *1.2 gal/min (4.5 l/min) maximum flow rate*
- *Includes drain*
- *Meets CalGreen requirements for lavatory faucets*
- *Available with fired enamel handle inserts*
- *Complements the Script collection*

CODES/STANDARDS APPLICABLE

Specified model meets or exceeds the following:

- *ADA**
- *ASME A112.18.1/CSA B125.1*
- *CSA B651**
- *EPA WaterSense®*
- *ICC/ANSI A117.1*
- *NSF 61*
- *OBC* (lever only)*
- *All applicable US Federal and State material regulations*

** Compliant when installed to the specific requirement of this regulation*

ADA | **CSA B651** | **OBC**

WaterSense Meets EPA Criteria
Certified by IAPMO R&T

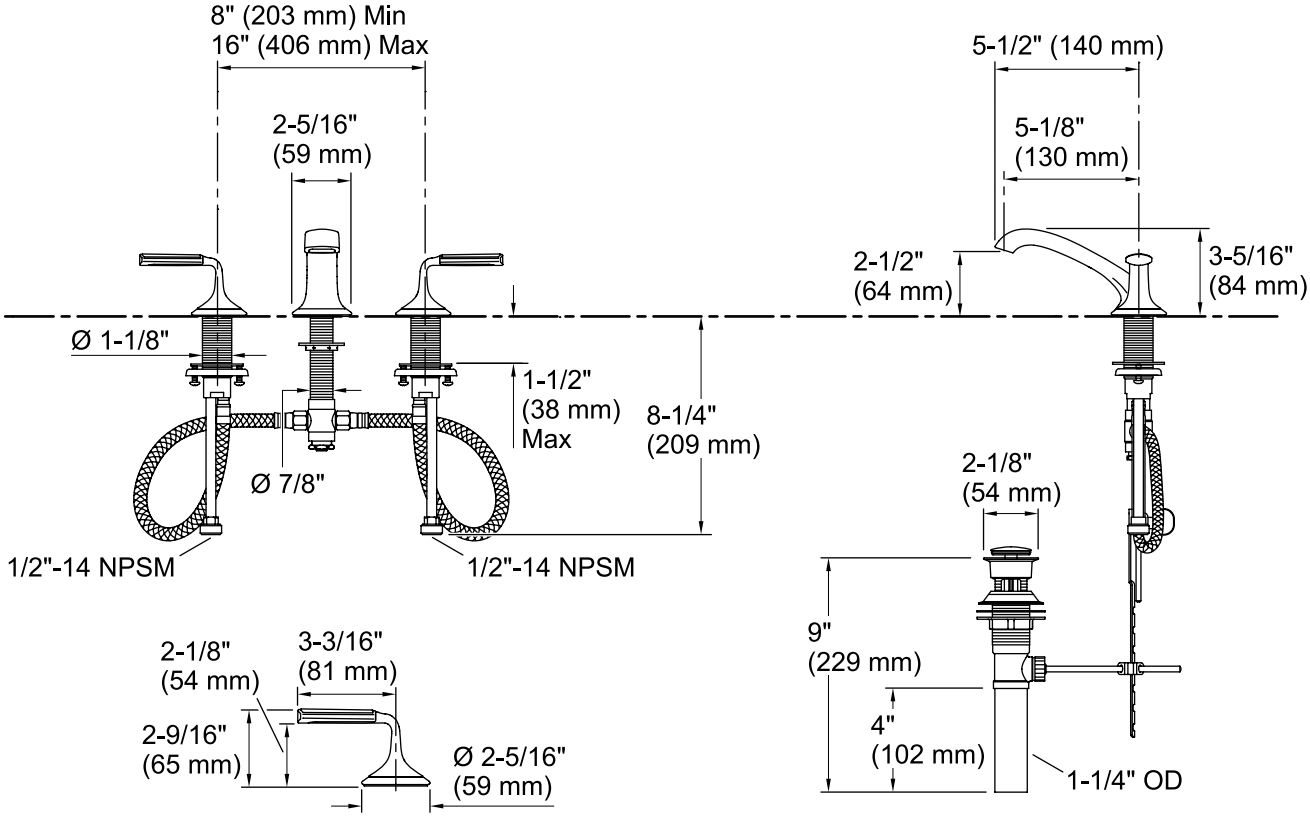

SPECIFIED MODEL				
Model	Description	Finishes		
P25054-CBW	Script Sink Faucet, Low Spout, Enamel Celeste Blue Wave, Lever Handles	❑ CP Polished Chrome	❑ AD Nickel Silver	❑ BV Brushed Bronze
P25054-FRW	Script Sink Faucet, Low Spout, Enamel Frost Wave, Lever Handles	❑ CP Polished Chrome	❑ AD Nickel Silver	❑ BV Brushed Bronze
P25054-SPR	Script Sink Faucet, Low Spout, Enamel Spring Rain, Lever Handles	❑ CP Polished Chrome	❑ AD Nickel Silver	❑ BV Brushed Bronze

We reserve the right to make revisions without notice in the design of products or in packaging unless this right has specifically been waived at the time the order is accepted.

©2020 KALLISTA

Questions? Problems? For additional assistance, please contact KALLISTA's Customer Service Department at 1-888-4-KALLISTA (1-888-452-5547) or kallista.com.