60"S BRITTANY VANITY

650-V60S-M-BKO
650-V60S-M-BNM
650-V60S-M-SBR
655-V60S-M-BW
650-V60S-M-SC
650-V60S-SGR
650-V60S-M-UGR
650-V60S-M-VBL

JAMES MARTIN VANITIES

FREEPOWER COMPATIBLE

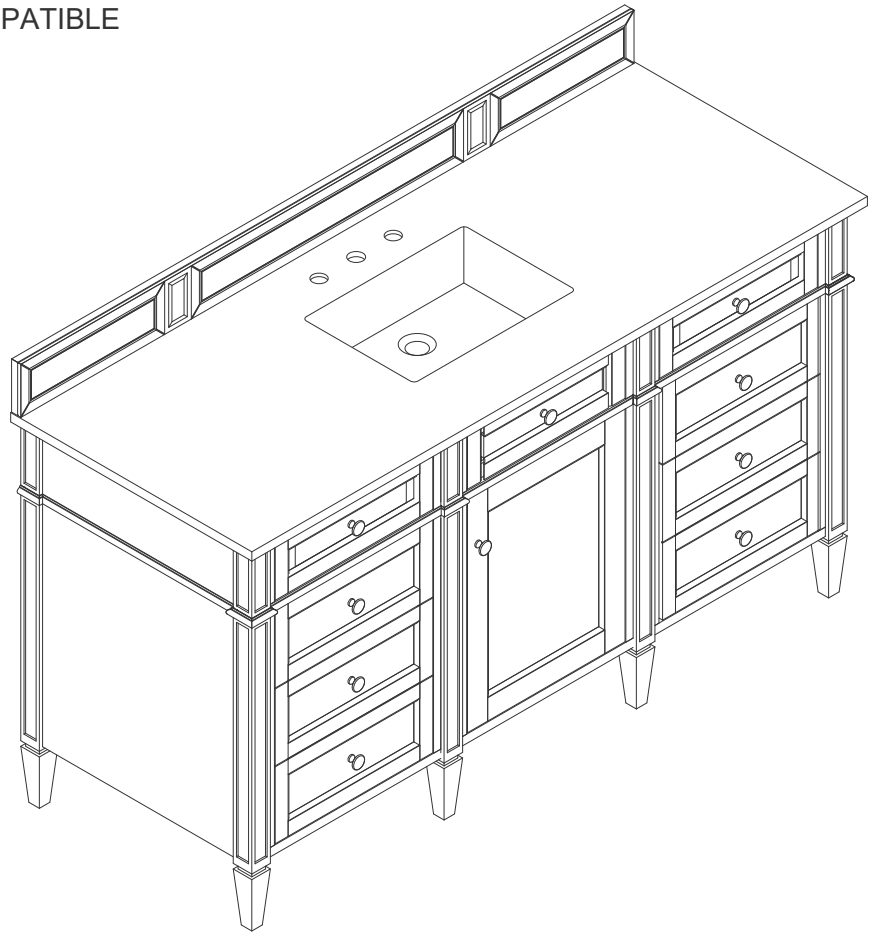

Features and Materials

Solids: BKO/BNM/BW/SC/SGR/UGR/VBL- Yellow Poplar;
SBR- Para Wood and Yellow Poplar
Veneers: BNM- Birch; SBR-Para Wood
Panels: Plywood
Installation Type: Floor Standing
Number of Basins: One, with Optional 3cm Top
Vanity Top Included: No, Optional 3cm Tops Available with Sinks
Optional Wooden Backsplash
Basins Included: NO
Overflow: Yes, Front Facing
Number of Doors: One
Number of Drawers: Six
Number of Tip Outs: One
Assembly Type: Installation of Optional 3cm Top with Sink
Drawer Box Material and Construction: 12mm Plywood/English Dovetail Joinery
Hardware Material and Finish: Zinc Alloy in Satin Nickel Color
Fits Drain Hole Size: 1 3/4"
Full Extension, Soft Close Glides
European Soft Close Hinges
Aluminum Laminate Drawer Liners
Adjustable Levelers

Dimension

Width: 59-3/4"
Depth: 22-7/8"
Height: 32-5/8"
Rough-In Height: 21-1/2"

Visit website for warranty and installation information
www.jamesmartinvanities.com

Version: 202505

60"S BRITTANY VANITY

650-V60S-M-BKO
650-V60S-M-BNM
650-V60S-M-BW
655-V60S-M-SBR
650-V60S-M-SC
650-V60S-M-SGR
650-V60S-M-UGR
650-V60S-M-VBL

JAMES MARTIN VANITIES

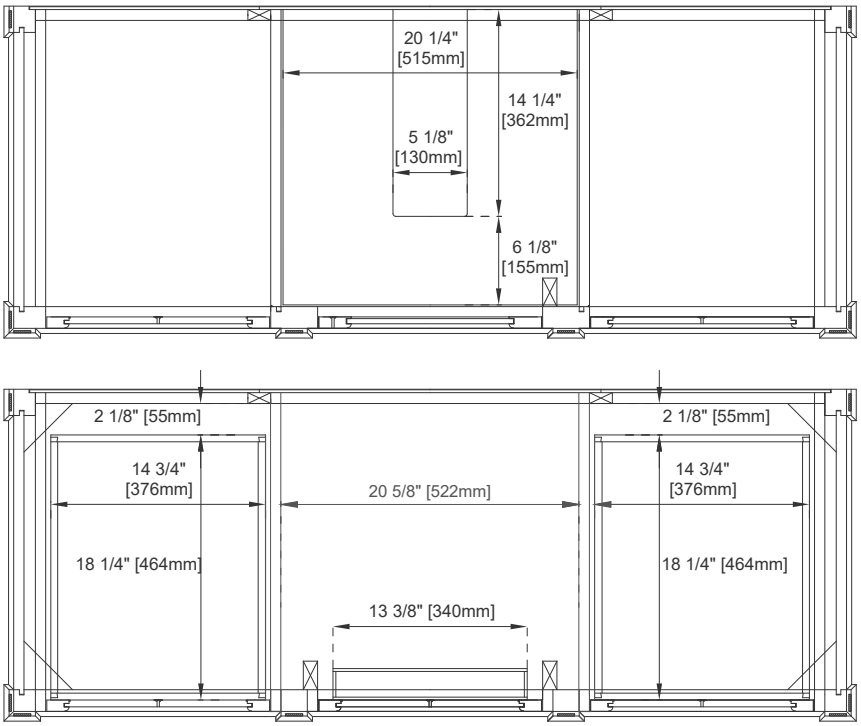

Top View 1

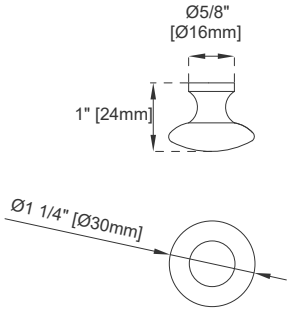

Knob

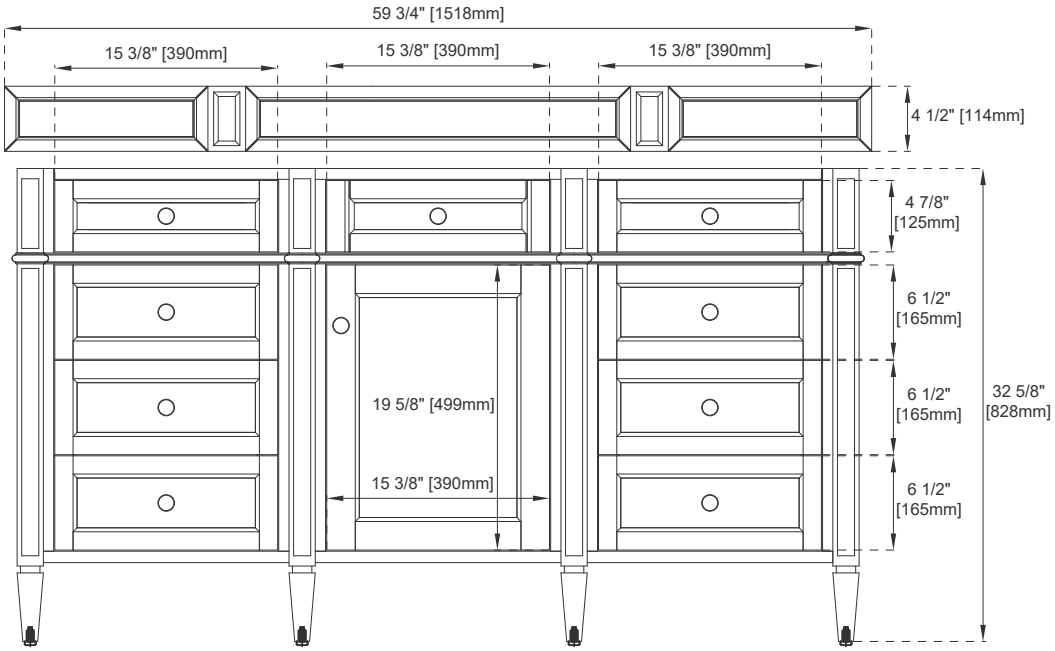

Front View

All dimensions are nominal

Diagrams are of cabinet only–James Martin Optional Countertops and sinks are not shown

Visit website for warranty and installation information
www.jamesmartinvanities.com

Version: 202505

60"S BRITTANY VANITY

650-V60S-M-BKO
650-V60S-M-BNM
650-V60S-M-BW
655-V60S-M-SBR
650-V60S-M-SC
650-V60S-M-SGR
650-V60S-M-UGR
650-V60S-M-VBL

JAMES MARTIN VANITIES

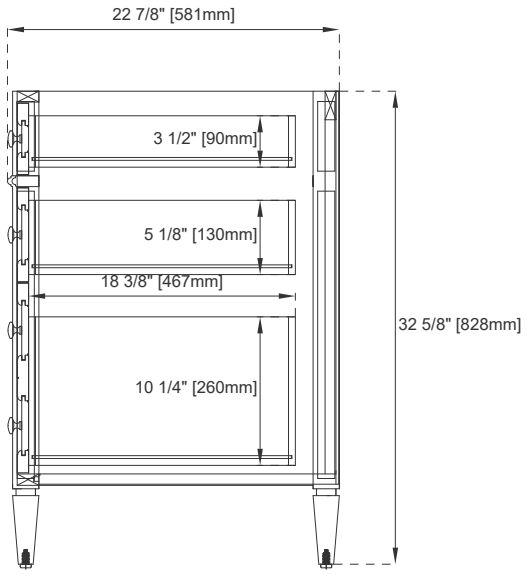

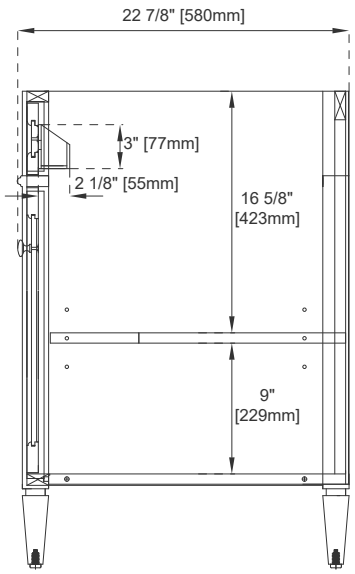

Side View

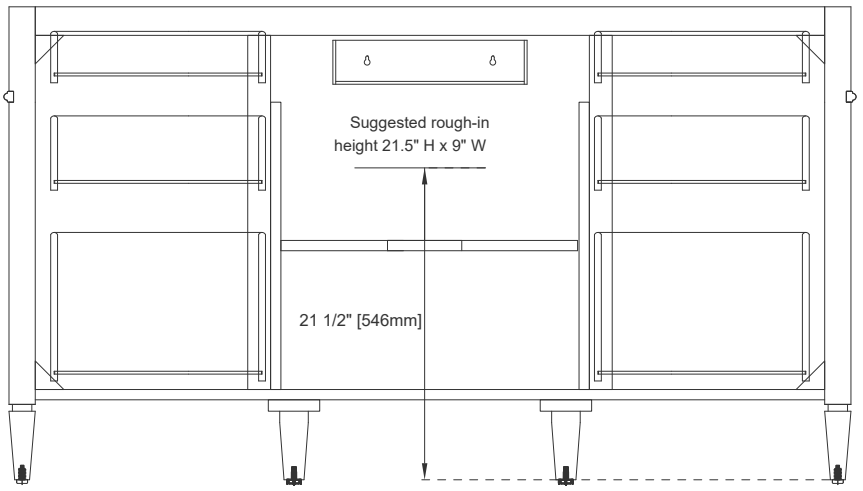

Back View

All dimensions are nominal

Diagrams are of cabinet only–James Martin Optional Countertops and sinks are not shown

Visit website for warranty and installation information
www.jamesmartinvanities.com

Version: 202505

26" 3cm COUNTERTOPS

60"S 3CM 050 SERIES
FREEPOWER WIRELESS CHARGING
SILESTONE COUNTERTOPS

080-S26
090-S26

JAMES MARTIN VANITIES

Silestone® by Cosentino

080, 090 Series Tops

Silestone is a low-silica mineral surface composed of premium minerals and recycled materials that produce a hygienic, high-performance, stain and scratch-resistant surface.

Silestone's revolutionary Hybriq+® technology effectively reduces crystalline silica content to less than 40%, resulting in an innovative, sustainable, and high-performance mineral surface. This groundbreaking technology utilizes 99% recycled water and 100% renewable electrical energy.

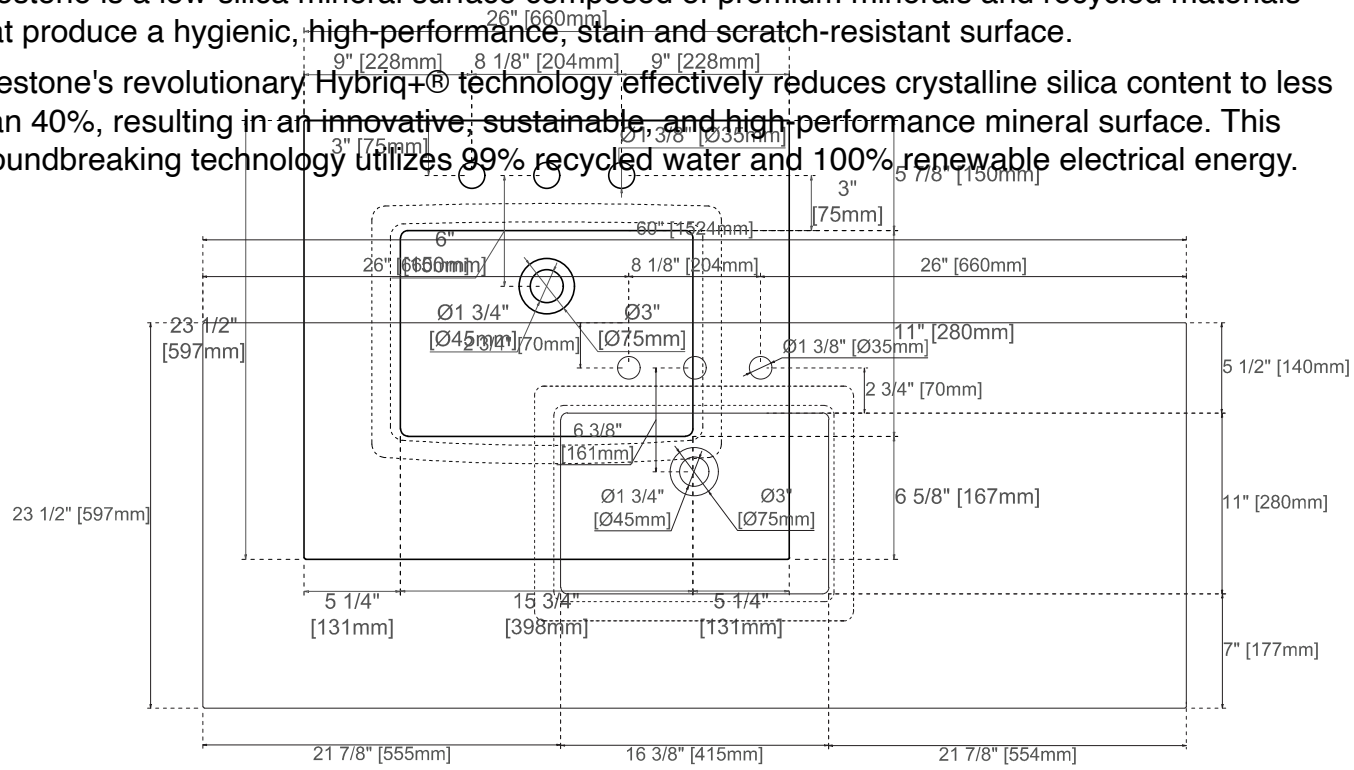

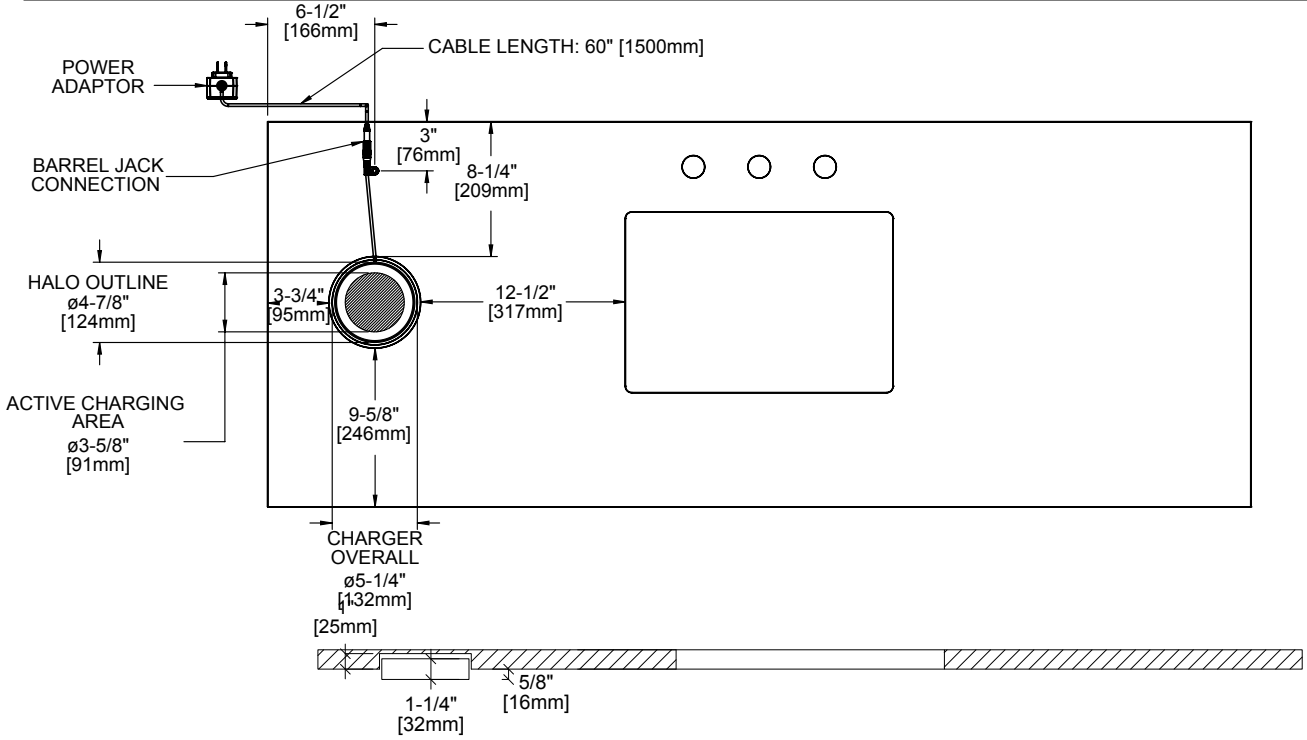

All dimensions are nominal

Visit website for warranty and installation information
www.jamesmartinvanities.com

Visit website for warranty and installation information
www.jamesmartinvanities.com

Version: 202505

Version:202301

3CM 050 SERIES SILESTONE® COUNTERTOPS

JAMES MARTIN VANITIES

Silestone Care and Maintenance

Silestone's hybrid composition consisting of premium minerals, quartz, and recycled materials makes it highly resistant to stains, preventing them from penetrating the surface and making daily cleaning easy and quick.

Routine Care: Simply wipe your Silestone surface with soap and water on a regular basis to maintain its beauty. For deeper cleaning, use any Ph-balanced (less than 10) general-purpose household cleaner. Q-Action cleaner is especially effective for the disinfection of kitchen countertops.

Using sealants and water repellants is not necessary to maintain the original sheen of your Silestone quartz top. Avoid using these products as they can create an undesirable build-up over time. If the surface of your Silestone countertop loses sheen, you may apply food-safe furniture spray.

Light Stains: Apply a small amount of a general-purpose household cleaner to the stain, let sit for 2 minutes and rub with a non-scratch scouring pad. Rinse immediately with water. For stains that harden as they dry, remove by gently scraping the surface with a razor blade or putty knife, holding it upright to avoid scratching the surface. Clean using warm, soapy water and rinse thoroughly.

Difficult/Stubborn Stains: The following products may be applied and let stand for 10 minutes before scrubbing and rinsing thoroughly. Caution should be exercised in the handling and storage of these chemicals.

Lacquer Thinner – Rubbing Alcohol – Ammonia – Mineral Spirits

Hardwater Stains: Apply a paste from equal parts baking soda and white vinegar. Let sit on the surface for 10-20 minutes and rub with a non-scratch pad. Rinse immediately with water.

General Precautions

Avoid using the following:

- Chlorine-based products
- Degreasing agents such as those used in oven cleaners
- Products high in alkaline (Ph over 10)

Heat Precautions

Although Silestone can withstand high temperatures for short periods of time, its performance varies with respect to different factors like thickness, color, location, etc. For this reason, it is not recommended that the product be exposed to sustained contact with a heat source, like curling irons, nor should hot saucepans, frying pans, deep-fat fryers, etc, be placed on it. The use of a hot pad or trivet is recommended in such situations.

Sun Exposure

- Silestone quartz is not intended for outdoor use
- Avoid places with UV lighting

Repairs

One of the most effective solutions for repairing scratches is to carefully fill them with grout or silica gel. Marble paste is also highly effective.

Because each type of damage needs to be carefully considered to determine the proper care method, we recommend consulting a professional.

SNK-RF
RECTANGULAR PORCELAIN UNDERMOUNT SINK

JAMES MARTIN VANITIES

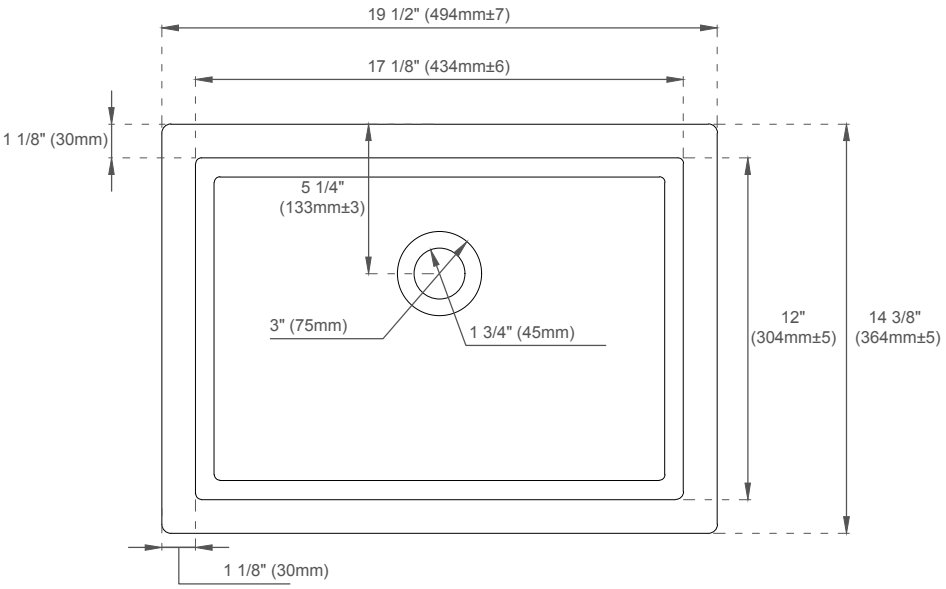

ASME A112.19.2/CSA B45.1

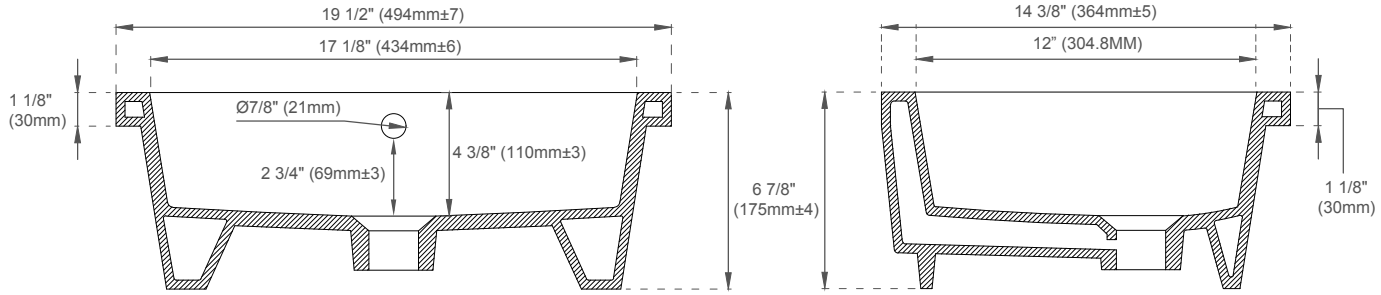

FEATURES:

- Designed to fit with all James Martin Vanities with a 3cm Silestone quartz top
- Sink Material: Porcelain
- Integrated overflow
- Sink shape: Rectangular with straight sides
- Sink ships in a separate carton from top and vanity
- Sink clips and hardware are not included. All mounting hardware ships with the 3cm quartz tops
- Drain included: NO
- Faucet included: NO
- Overflow cover: NO

EXTERNAL DIMENSIONS:

Length: 19-1/2”
Width: 14-3/8”
Height: 6-7/8”

INTERNAL BASIN DIMENSIONS:

Basin Length: 17-1/8”
Basin Width: 12”
Basin Depth: 4-3/8”
Fits Drain Hole Size: 1-1/2”

All dimensions are nominal

Visit website for warranty and installation information
www.jamesmartinvanities,com

Version: 202301