TECHNICAL SPECIFICATIONS

Luxura® 5 Whirlpool Bath with 3 Tile Flange

LUX6032 WRL 2XX	Luxura 5 Whirlpool Bath with 3 Tile Flange Right Hand (F942)
LUX6032 WLR 2XX	Luxura 5 Whirlpool Bath with 3 Tile Flange Left Hand (F941)

Luxura® 5 Bath with 3 Tile Flange

LUX6032 BRX XXX	Luxura 5 Bath with 3 Tile Flange Right Hand (H168)
LUX6032 BLX XXX	Luxura 5 Bath with 3 Tile Flange Left Hand (F943)

INSTALLATION NOTES
Refer to installation instructions included with fixture before beginning installation. Please confirm product availability and specifications before commencing with any installation work.

PRODUCT SPECIFICATIONS AND AVAILABILITY ARE SUBJECT TO CHANGE WITHOUT NOTICE.

KEY DIMENSIONS

DIMENSIONS
60” L x 32” W x 20-¼” H
(1524 mm) L x (813 mm) W x (514 mm) H
DRAIN/OVERFLOW
A: 15-¼” (387 mm) B: 8-¼” (210 mm)
CUTOUT
Not Applicable
TOTAL WEIGHT
F941, F942: 697 lb (264 kg) / 52 lb/sq. ft. (255 kg/m^2)
F943, H168: 672 lb (305 kg) / 50 lb/sq. ft. (246 kg/m^2)
OPERATING GALLONAGE
44 U.S. Gal. (167 Liters)
Max. 50 U.S. Gal. (189 Liters)
PRODUCT WEIGHT
F941, F942: 80 lb (36 kg)
F943, H168: 55 lb (25 kg)
SKIRT MOUNTING
Optional, U-Frame: P/N F954
ELECTRICAL SPECIFICATIONS MODELS F941, F942 ONLY
Requires a dedicated GFCI protected separate circuit.
Motor/Pump: 120 VAC, 15 AMP, 60 Hz.
RapidHeat™: 120 VAC, 15 AMP, 60 Hz.
HEATER (OPTIONAL) MODELS F941, F942 ONLY
Requires a dedicated GFCI protected separate circuit.
RapidHeat™: P/N S750000

FEATURES, UPGRADES & ACCESSORIES

- Right and Left Hand Drain Location
- Accessories / Hardware:
  - Trip-Lever Drain Kit #X559
  - Rotary Drain Kit, 26” Cable #8730
  - TheraPro Jet Trim Kit: #GU44
  - AccuPro Jet Trim Kit: #GU45
- Trim Kit Finishes Available:
  - (827) – Chrome
  - (826) – Brushed Nickel
  - (845) – Oil Rubbed Bronze

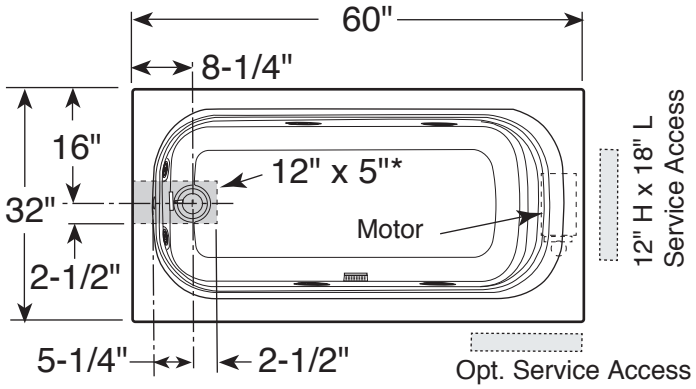

Product Shown: Luxura 5 Whirlpool Bath with 3 Tile Flange Left Hand Model: F941
* Measurements inside unit represent cutout in floor to allow for drain/overflow.
Minimum Service Access dimensions given.

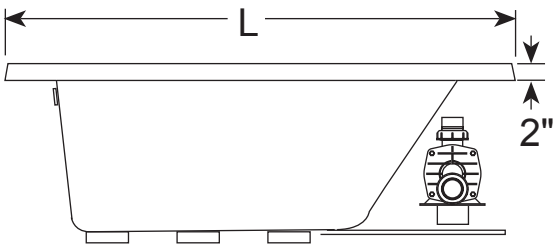

SIDE VIEW

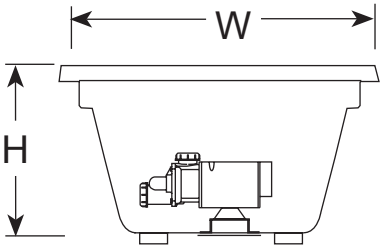

END VIEW

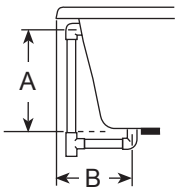

DRAIN/OVERFLOW

© 2010 Jacuzzi Luxury Bath • For additional information call Customer Service 800-288-4002 • *www.jacuzzi.com/technicalspecs*
Refer to installation instructions included with fixture before beginning installation. Please confirm product availability and specifications before commencing with any installation work.
PRODUCT SPECIFICATIONS AND AVAILABILITY ARE SUBJECT TO CHANGE WITHOUT NOTICE.