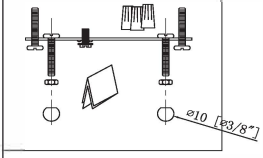

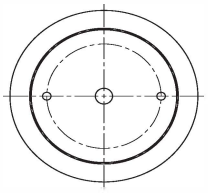

INNOVATIONS LIGHTING
CREATIVITY MEETS EVOLUTIONARY DESIGN©

DESIGN COPYRIGHT - 12/21/2022
ALL RIGHTS RESERVED AND MAY NOT BE DUPLICATED WITHOUT OUR WRITTEN PERMISSION

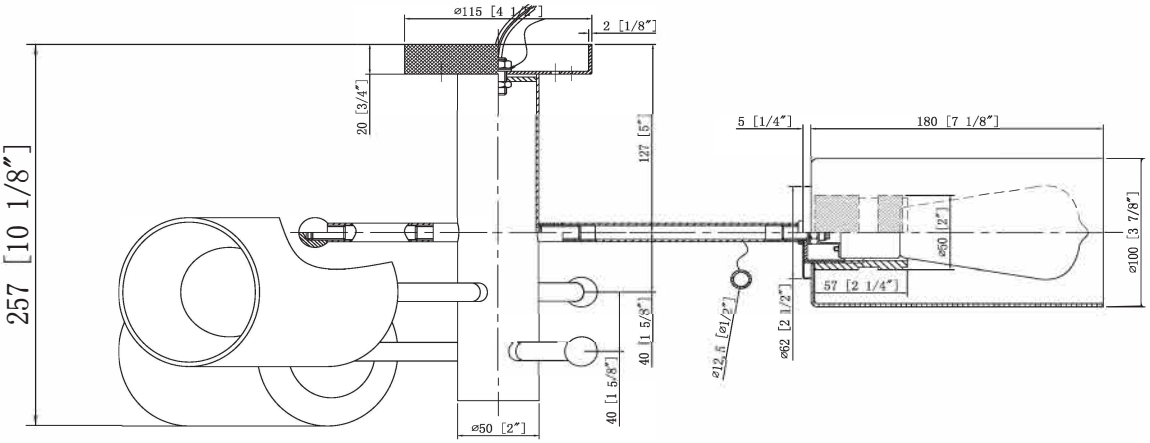

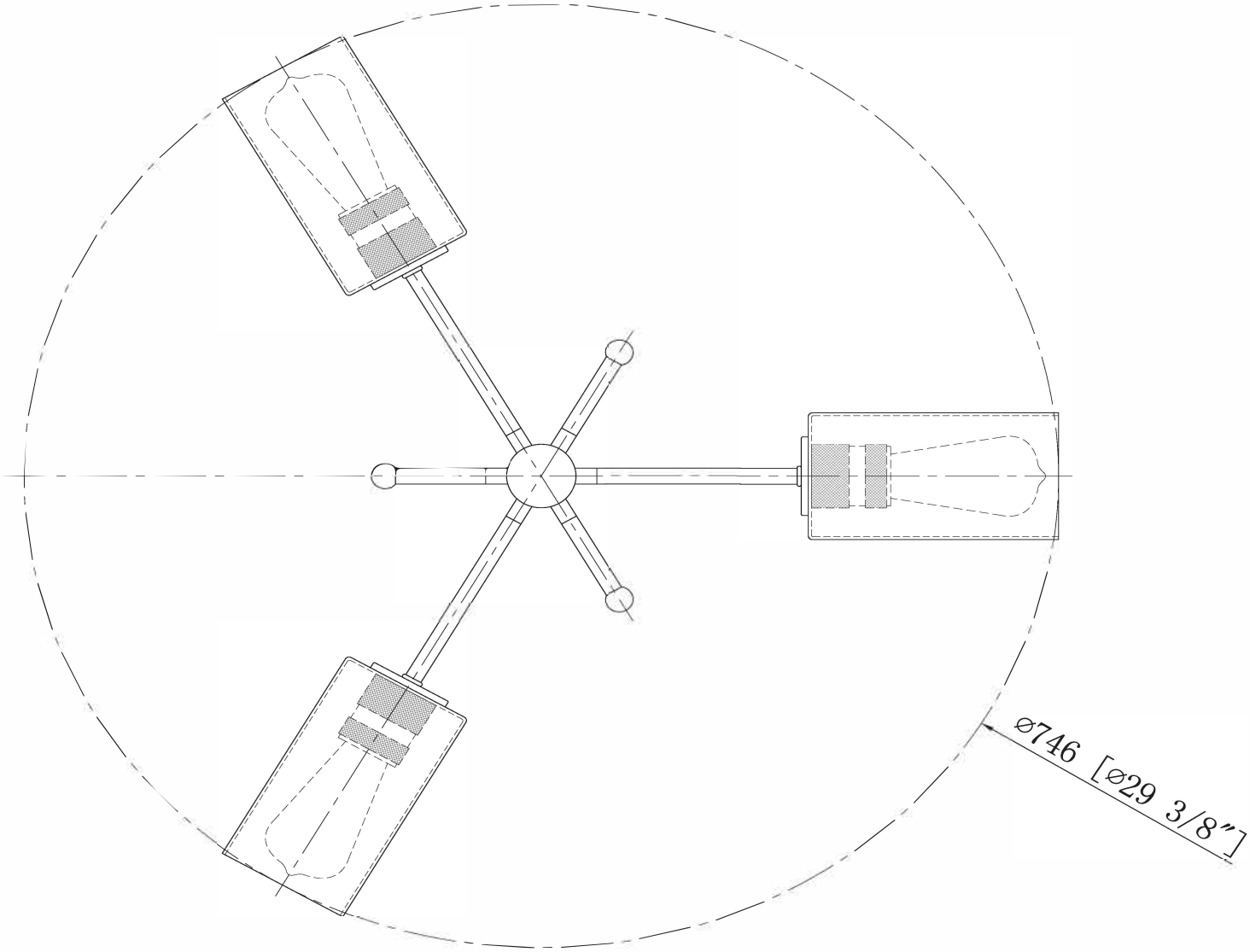

ITEM: 434-3F-7