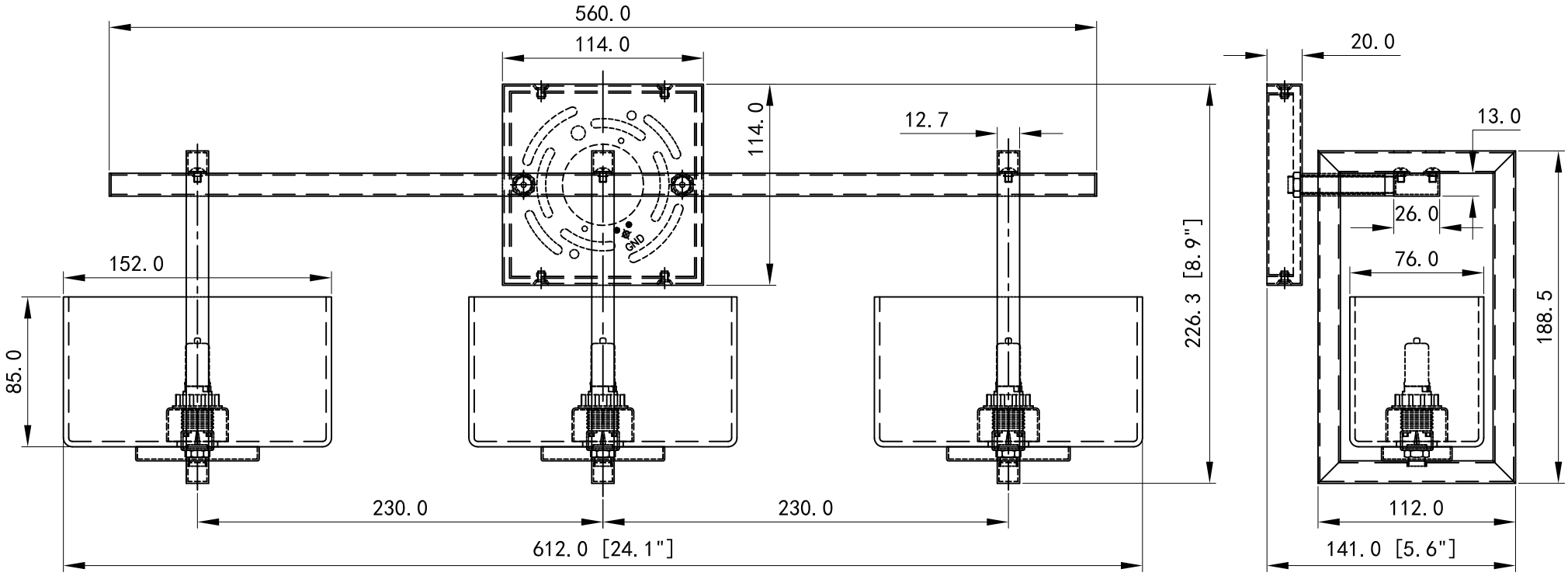

INNOVATIONS LIGHTING
DESIGN COPYRIGHT - 28/08/2020
ALL RIGHTS RESERVED AND MAY
NOT BE DUPLICATED WITHOUT OUR
WRITTEN PERMISSION

ITEM:J2004170-3B-XX