model SP212

Vacuum Breaker

FEATURES & BENEFITS

OPTIONS

For more information, visit www.hawsco.com or call (888) 640-4297.

SPECIFICATIONS

Model SP212 is a rough chrome-plated brass vacuum breaker, 3/8" IPS. Compliant to CSA B64.8

APPLICATIONS

DISCLAIMER: Continued product improvements make specifications subject to change without notice. Check www.hawsco.com for the latest product information and updates.

THIS DOCUMENT IS TRUE AND CORRECT AT TIME OF PUBLICATION. CONTINUED PRODUCT IMPROVEMENTS MAKE SPECIFICATIONS AND MEASUREMENTS SUBJECT TO CHANGE WITHOUT NOTICE.

NOTES:

1. THIS VACUUM BREAKER IS A BACKSIPHONAGE PREVENTER THAT IS DESIGNED FOR CONTINUOUS PRESSURE APPLICATIONS. IT MUST BE INSTALLED IN AN UPRIGHT POSITION. BECAUSE LOCAL, STATE AND FEDERAL CODE REQUIREMENTS VARY, BE SURE TO OBTAIN AUTHORITY APPROVAL ON THE USE AND APPLICATION OF THIS MODEL BEFORE INSTALLATION.
2. THE VACUUM BREAKER SHOULD BE INSTALLED AT THE FURTHER MOST DOWNSTREAM END OF THE SUPPLY PIPE OR FIXTURE WHERE TEMPORARY SPILLAGE DUE TO CRITICAL FLOW PRESSURE CONDITIONS CAN BE DISCHARGED HARMLESSLY.
3. FIGURES 1, 2, 3, AND 4 SHOW THE INSTALLATION OF VACUUM BREAKER WITH DIFFERENT EYE/FACE AND BODY SPRAY MODELS.

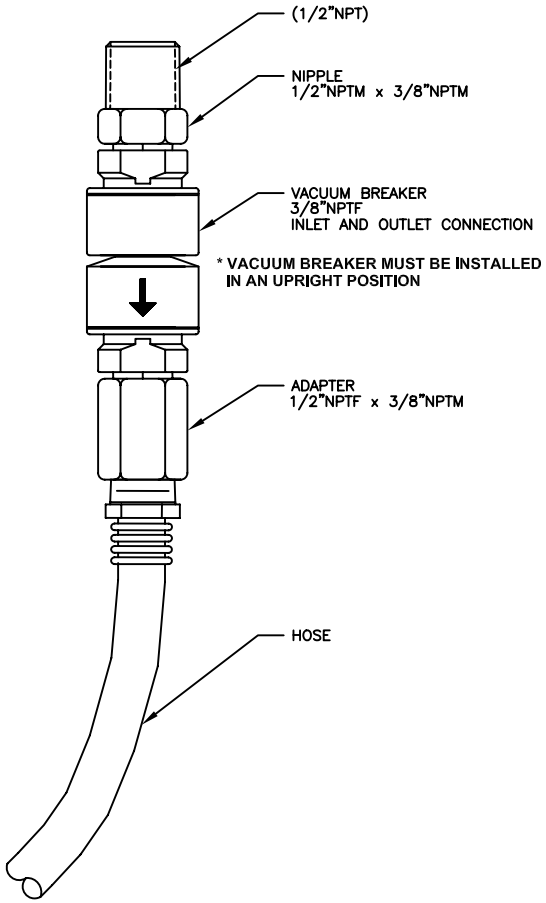

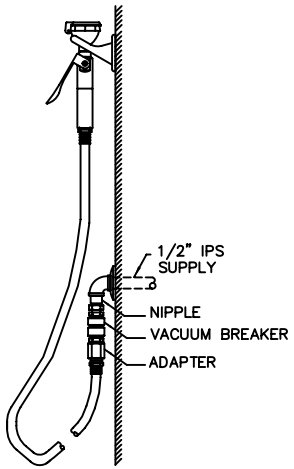

HAND HELD EYE/FACE AND BODY SPRAY

FIGURE 1

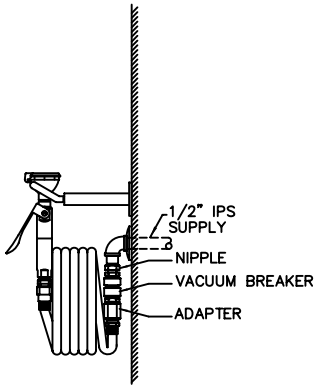

EYE/FACE AND BODY SPRAY WITH RECOIL HOSE

FIGURE 2

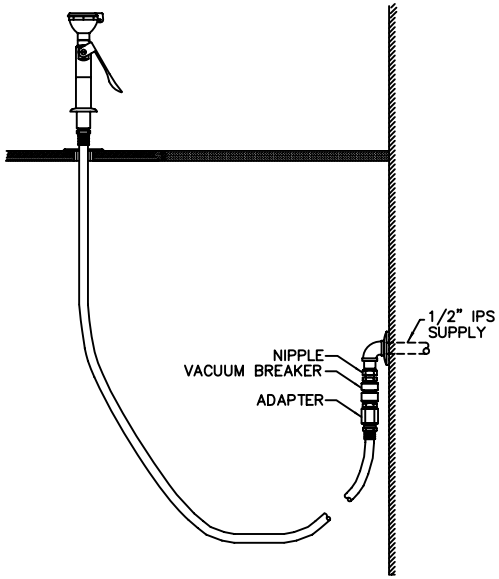

DECK MOUNTED EYE/FACE AND BODY SPRAY

FIGURE 3

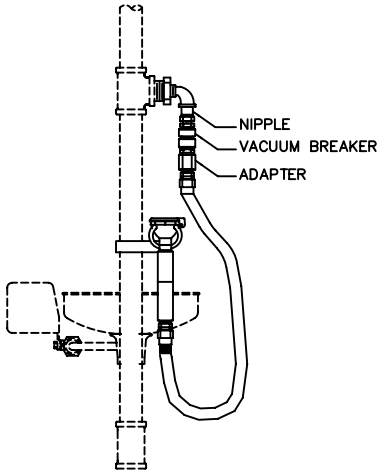

RETRO-FIT EYE/FACE AND BODY SPRAY

FIGURE 4

Haws corporation
INFO FAX : 1-888-FAX-HAWS (1-888-329-4297)
1455 Kleppe Ln, Sparks NV, 89431
Phone: 775-359-4712 Fax: 775-359-7424
Haws Ag Bachweg 3 CH-3401 Burgdorf Switzerland
Haws Mfg Pte Ltd 74 Sungei Kadut Loop Singapore 729531
e-mail: Haws@hawsco.com website: www.hawsco.com

ECR NO.	REVISED PER	BY:	MODEL(S):	PART NUMBER:
	ECN: 3910	HM	SP212	0002080405
DRAWN: STH	DATE: 11/09/94	CHK'D.:	INFO FAX DOC #: 277212	DRAWING NUMBER: 11731A00 REV. 2
APPROVED:	DATE:		SCALE: 1:19 DRAWING TYPE: INSTALLATION/FAXBACK	SIZE: A SHT. 1 OF 1

DWG. NO. 11731A00

©2006 Haws Corporation - All Rights Reserved HAWS® and other trademarks used in these materials are the exclusive property of Haws Corporation.