THIS DOCUMENT IS TRUE AND CORRECT AT TIME OF PUBLICATION. CONTINUED PRODUCT IMPROVEMENTS MAKE SPECIFICATIONS AND MEASUREMENTS SUBJECT TO CHANGE WITHOUT NOTICE.

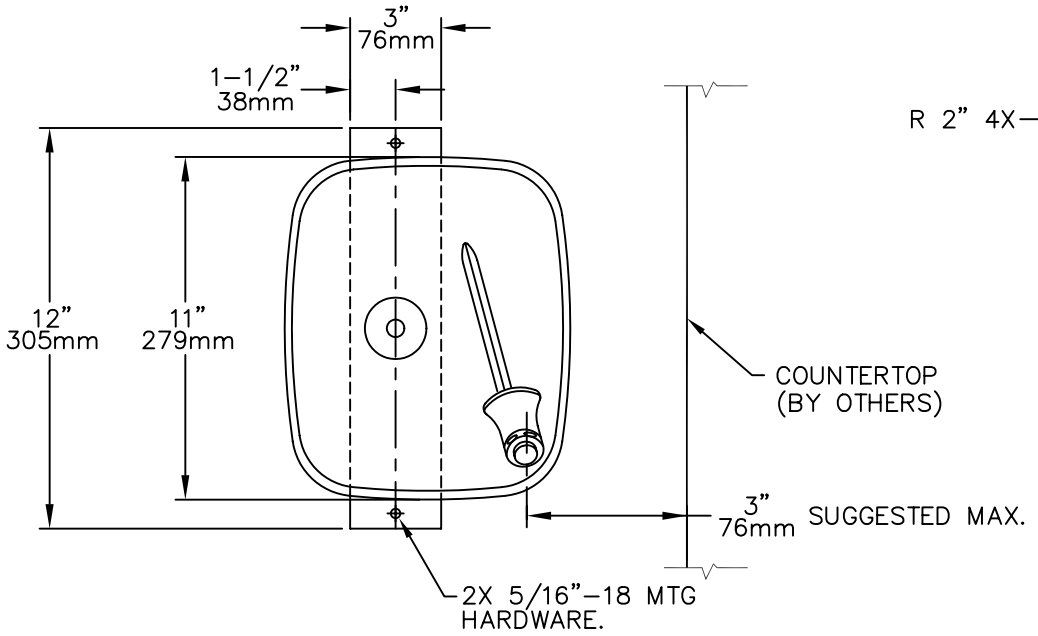

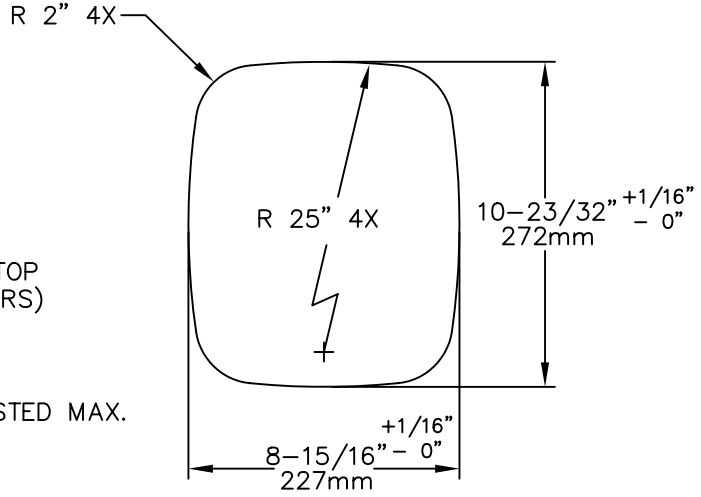

CUTOUT DETAIL

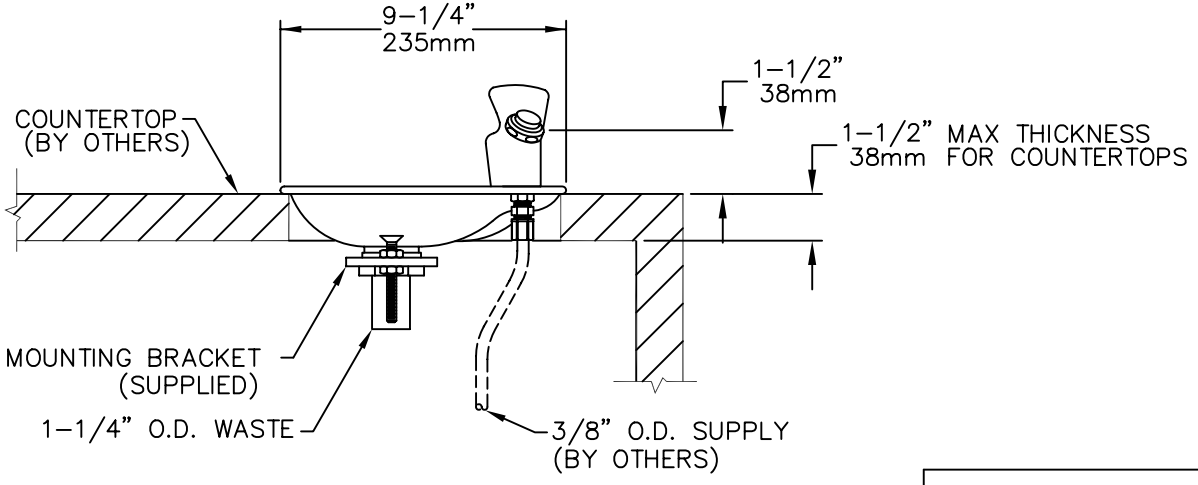

THESE DIMENSIONS MAY VARY ± 1/4" (6.4mm).

Haws corporation
INFO FAX : 1–888–FAX–HAWS (1–888–329–4297)
1455 Kleppe Ln, Sparks NV, 89431
Phone: 775–359–4712 Fax: 775–359–7424
Haws Ag Bachweg 3 CH–3401 Burgdorf Switzerland
Haws Mfg Pte Ltd 74 Sungei Kadut Loop Singapore 729531
e–mail: Haws@hawsco.com website: www.hawsco.com

REVISED PER ECN: 3264	BY: MD	APVD:	TITLE: DECK MOUNTED FOUNTAIN – MODEL 4010
DRAWN: J. FIGUEROA	06/94		MODEL: 4010
APPROVED:			INFO FAX DOC #: 24010
			SCALE: 1:3 DRAWING TYPE: INSTALLATION/FAXBACK

PART NUMBER:	0002077460
DRAWING NUMBER:	00159C00
REV.	5
SIZE: A	SHT. 1 OF 1

DWG. NO. 00159C00