THIS DOCUMENT IS TRUE AND CORRECT AT TIME OF PUBLICATION. CONTINUED PRODUCT IMPROVEMENTS MAKE SPECIFICATIONS AND MEASUREMENTS SUBJECT TO CHANGE WITHOUT NOTICE.

NOTES:

1. WHEN INSTALLING THIS UNIT, LOCAL, STATE OR FEDERAL CODES SHOULD BE ADHERED TO. WASTE CONNECTION MUST ADHERE TO LOCAL HEALTH AND PLUMBING CODES.
2. SHOWER MUST BE POSITIONED IN-LINE WITH EYE/FACEWASH HEAD TO ALLOW FOR SIMULTANEOUS USE BY THE SAME USER PER ANSI Z358.1.
3. FLOW RATE FOR EYE/FACE WASH IS 3.7 GPM AND EXCEEDS ANSI STANDARD Z358.1.
4. DIMENSIONS MAY VARY BY ± 1/2" [12.7mm].

* 5. MOUNTING HARDWARE NOT SUPPLIED.

OPTIONAL SHOWER HEAD INSTALLATION

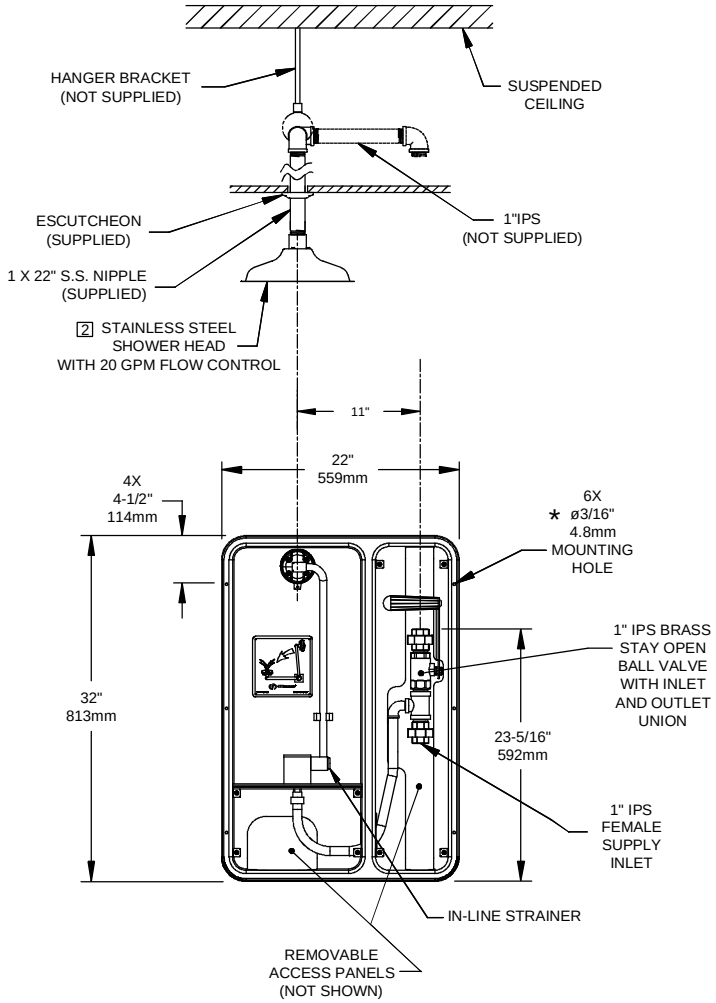

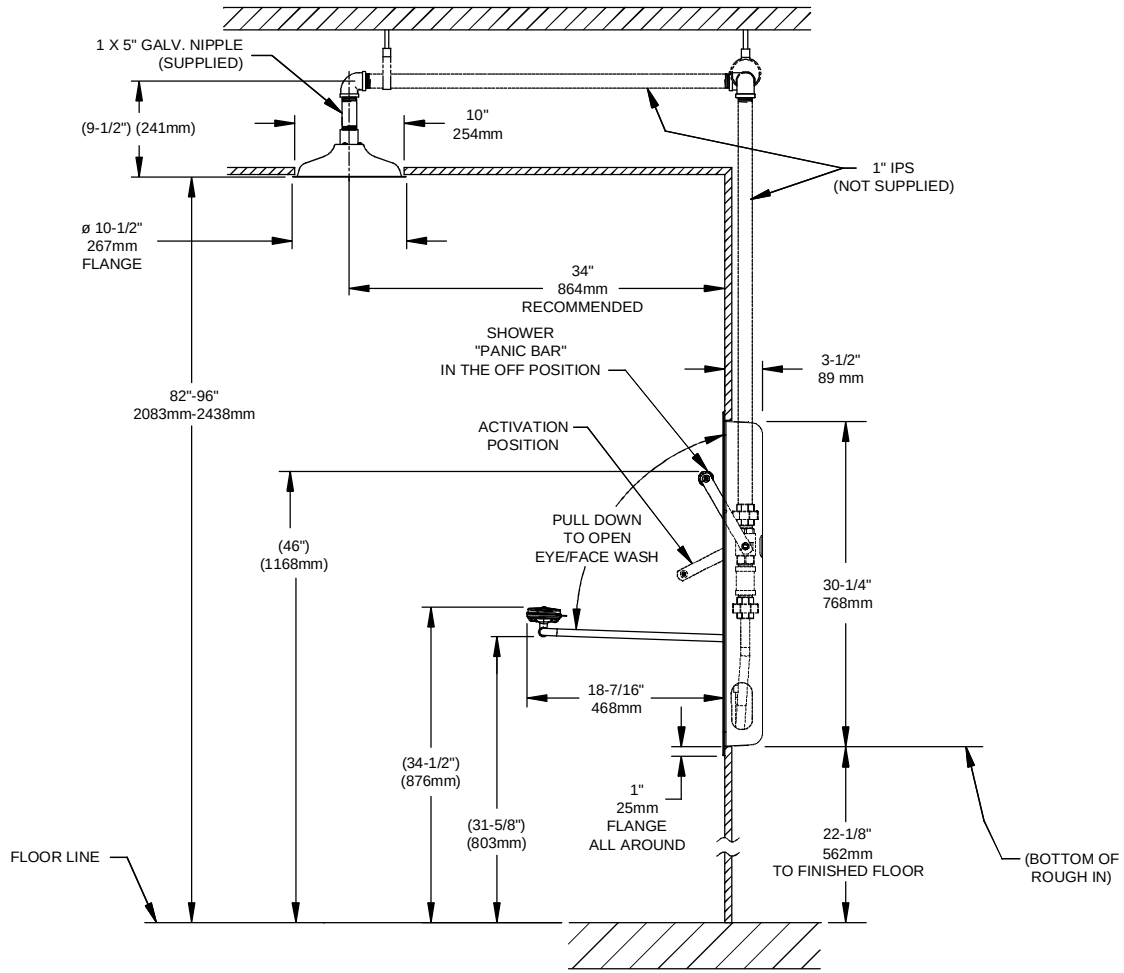

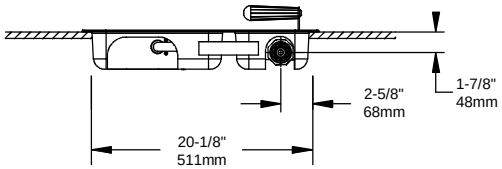

1455 KLEPPE LANE
SPARKS, NEVADA 89431
(775) 359-4712 FAX (775) 359-7424
E-MAIL: HAWS@HAWSCO.COM
WEBSITE: WWW.HAWSCO.COM

ECN NO.	REVISED PER	BY:	MODEL(S)	PART NUMBER:
4290	ECN: 4734	HM	8355WCC	0002080140.D
DRAWN: I. ROBERTS	DATE: 7/13/10	CHK'D.:		DRAWING NO.: 15911A00 REV. 4
APPROVED:	DATE:			

SCALE: 1/18 | DRAWING TYPE: INSTALLATION | SIZE: A | SHEET 1 OF 1

DWG. NO. 15911A00

©2012 Haws Corporation - All Rights Reserved HAWS® and other trademarks used in these materials are the exclusive property of Haws Corporation.