Metris
Metris 110 Single-Hole Faucet CoolStart without Pop-up
Finishes : **Chrome** Part no. : **31121001**

Description

Features

- Solid brass
- Aerated spray
- Flow: 1.5 GPM
- Ceramic cartridge
- Pop-up assembly not included

Optional accessories

- Base Plate for Contemporary Single-Hole Faucets, 6" (#06490USA)

Item details

List Price	$ 246.00

Technology

Eco Smart · Quick Clean · Comfort Zone · Cool Start

Compliance

ADA · CSA C US · WaterSense Meets EPA Criteria

Product image
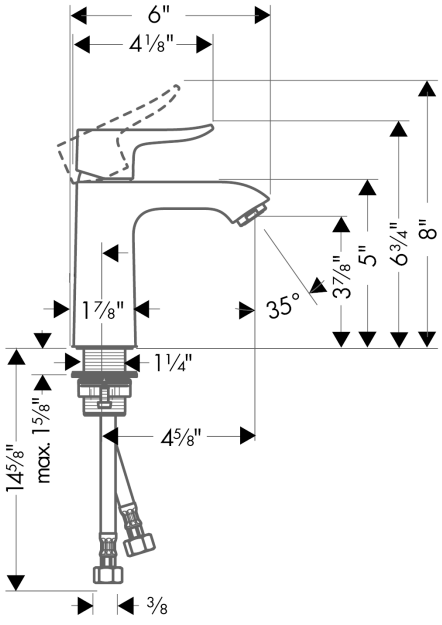
Scale drawing