AXOR

hansgrohe

Brand	hansgrohe
Art. Name	**Tecturis E** Freestanding Tub Filler with 1.75 GPM Handshower
Art. Nr.	73445001
Product Finish	chrome
Pos.	22

Product Picture

Drawing

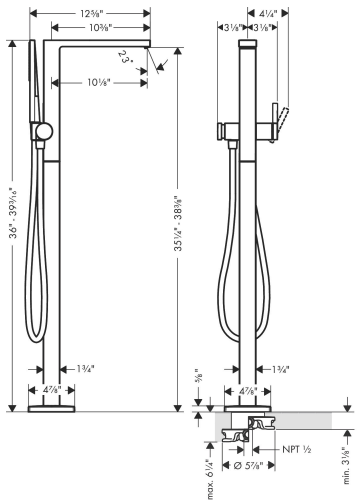

Features

- Consists of: Freestanding tub filler trim, Baton handshower, Handshower hose, Handshower holder
- Spray type mixer: WaterfallStream
- Spray type hand shower: PowderRain
- Flow rate of hand shower at 3 bar: 1.75 GPM (6.6 L/Min)
- Ceramic cartridge
- Pressure diverter Select with automatic resetting
- Integrated double backflow prevention

Technology

AirPower

Select

Codes / Standards

- CEC/California/Watersaving
- cUPC/IAPMO/3016/Tap+shower/1,75pm
- WaterSense/IAPMO/7286/Shower_Combi