G-6156-LM46B-T

TERRA Series

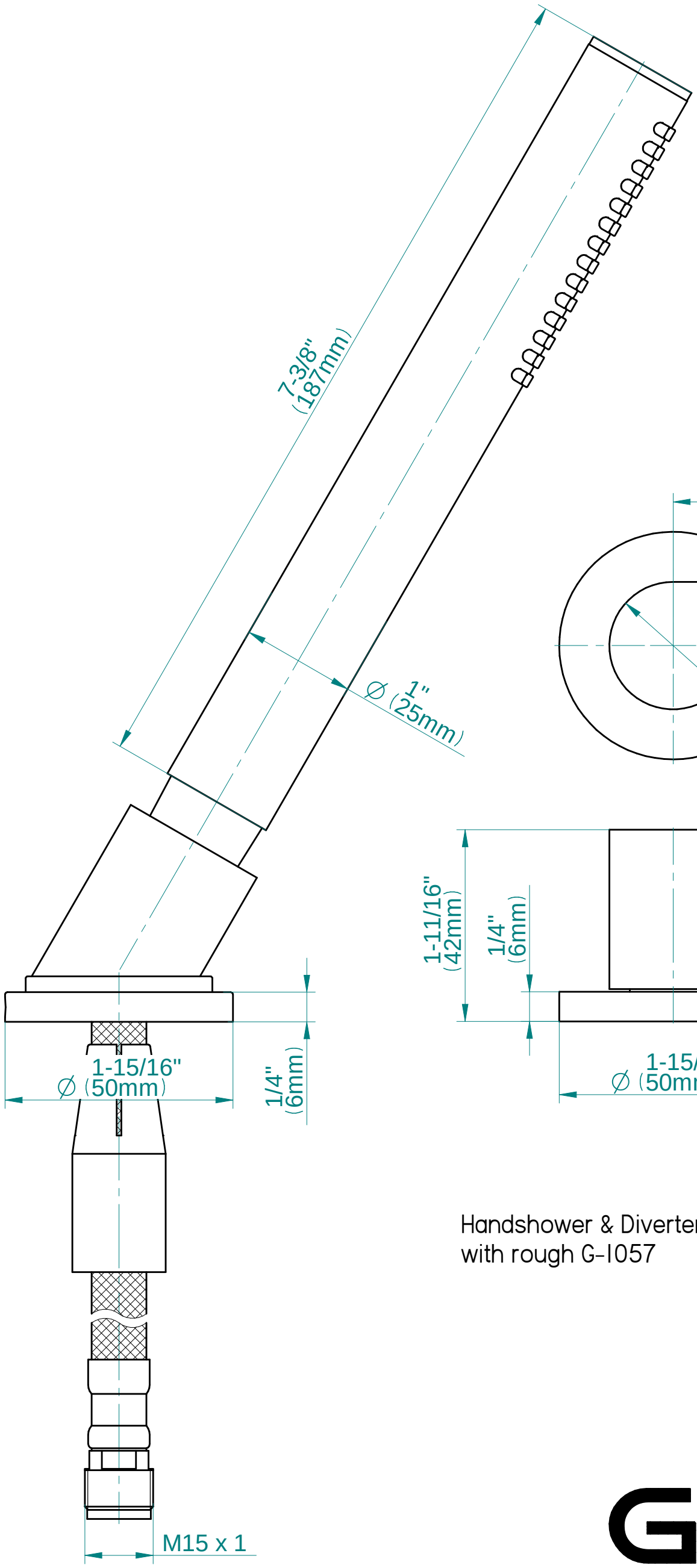

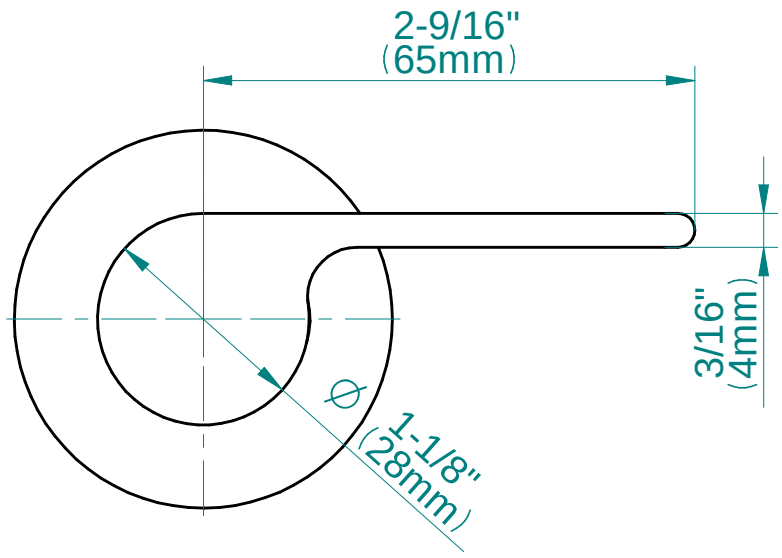

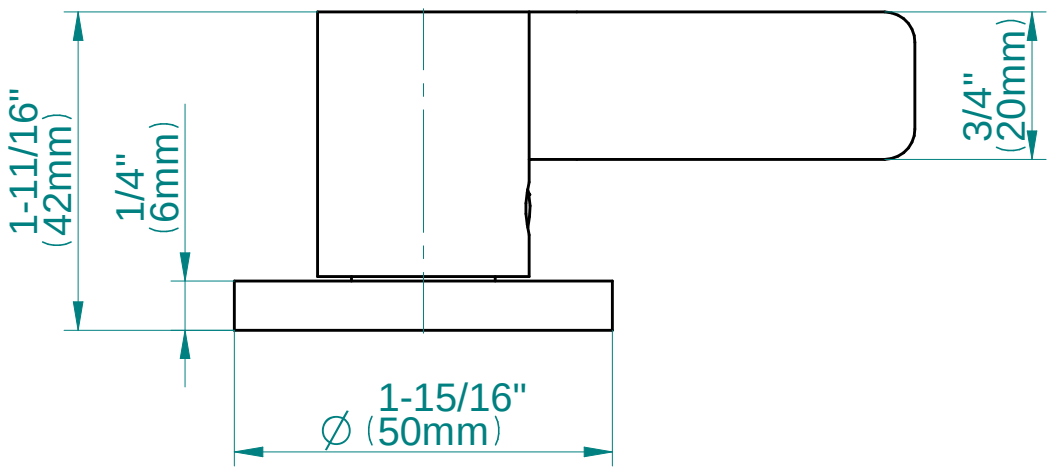

Handshower & Diverter Trim set is designed to operate with rough G-1057

GRAFF®

CUTTING EDGE DESIGN