G-6163-LM41B

M.E. 25 Collection
Bidet Set

Product Features

- 4-hole installation
- Vertical spray with vacuum breaker
- Includes manual pop-up drain assembly with overflow

Code Compliance

- ADA

Warranty

- Limited lifetime warranty

For complete warranty information go to
https://www.graff-designs.com/en/info/faqs

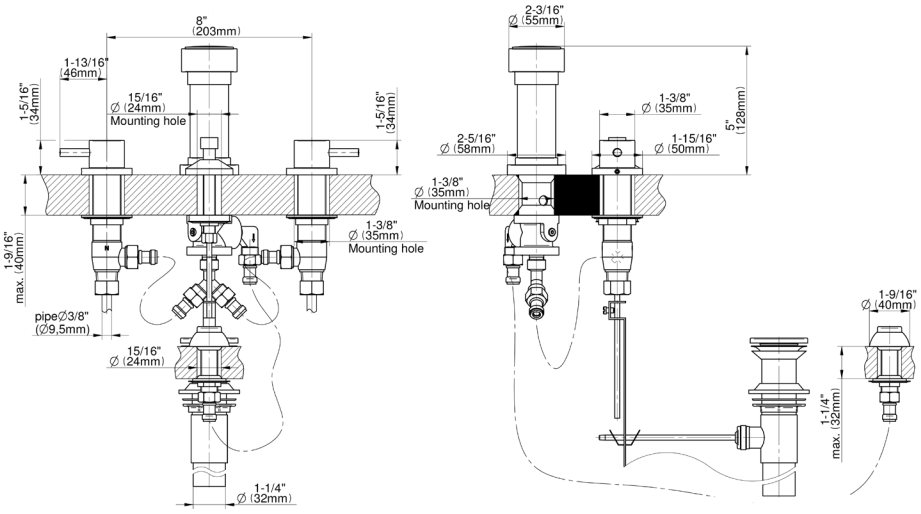

Available Finishes

- Polished Chrome
  G-6163-LM41B-PC
- Polished Nickel
  G-6163-LM41B-PN
- Unfinished Brass*
  G-6163-LM41B-UB*
- Unfinished Brushed Brass*
  G-6163-LM41B-UBB*
- Steelnox® (Satin Nickel)
  G-6163-LM41B-SN
- Olive Bronze*
  G-6163-LM41B-OB*
- Architectural White®*
  G-6163-LM41B-WT
- Architectural Black®*
  G-6163-LM41B-BK
- Matte Black*
  G-6163-LM41B-MBK
- Gunmetal*
  G-6163-LM41B-GM
- Onyx PVD®*
  G-6163-LM41B-OX
- Brushed Onyx PVD®*
  G-6163-LM41B-BOX
- OR'osa PVD®*
  G-6163-LM41B-RG
- Brushed OR'osa PVD®*
  G-6163-LM41B-BRG
- Polished Brass PVD*
  G-6163-LM41B-PB
- Brushed Brass PVD*
  G-6163-LM41B-BB
- 24K Gold Plated*
  G-6163-LM41B-BAU*
- 24K Brushed Gold Plated*
  G-6163-LM41B-BAU*

*special order finish - call for availability