JGB450DEK

GE Appliances 30" Free-Standing Gas Range

DIMENSIONS AND INSTALLATION INFORMATION (IN INCHES)

ELECTRICAL RATING: 120V, 60Hz, 15A

Installation Information: Before installing, consult installation instructions packed with product for current dimensional data.

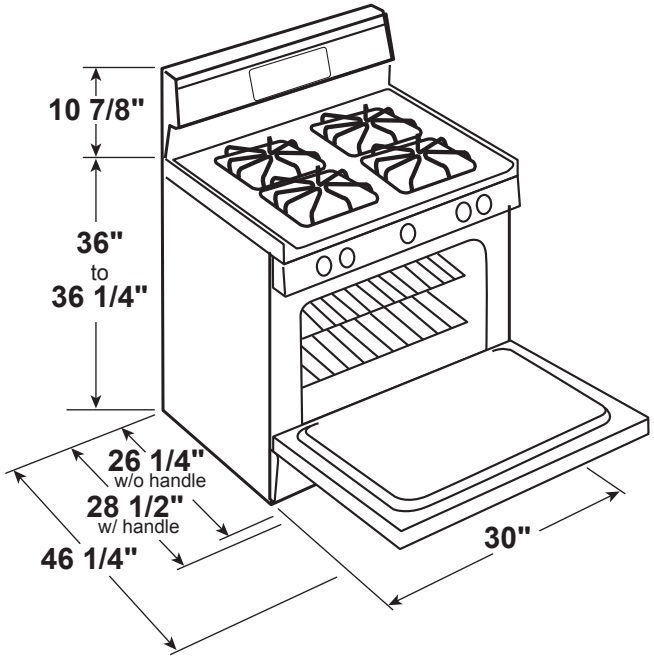

GAS PIPE AND ELECTRICAL OUTLET LOCATIONS

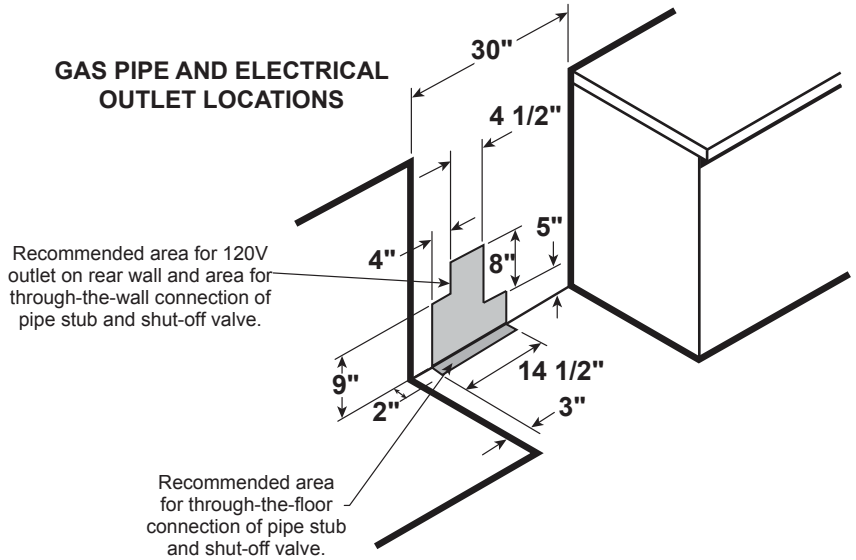

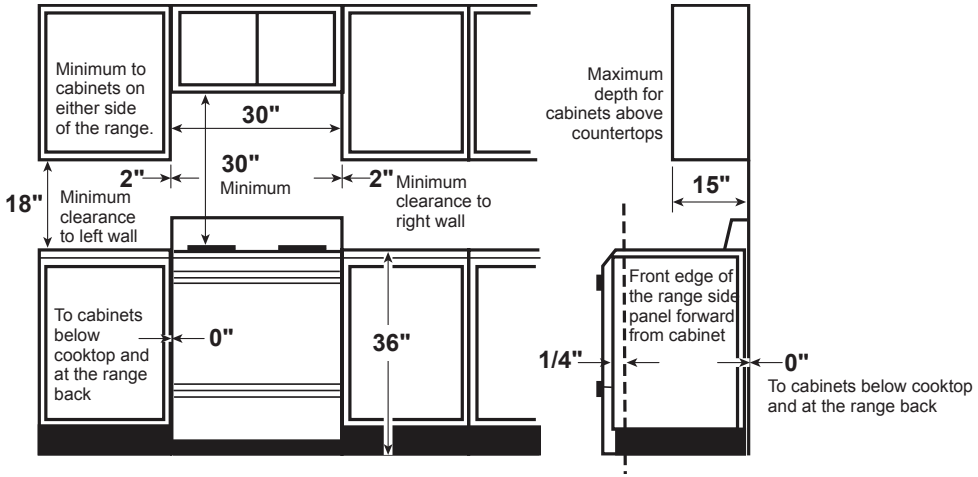

GE APPLIANCES

For answers to your Monogram, GE Café™ Series, GE Profile™ Series or GE Appliances product questions, visit our website at geappliances.com or call GE Answer Center® Service, 800.626.2000.

All GE ranges are equipped with an Anti-Tip device. The installation of this device is an important, required step in the installation of the range.

Specification Revised 2/16

JGB450DEK

GE Appliances 30" Free-Standing Gas Range

FEATURES AND BENEFITS

13,000 BTU burner – Delivers a wide range of heat output ideal for most cooking requirements

Black matte steel grates – Enjoy a high-end look with a durable, matte coating

Precise Simmer burner – Delicate foods don't burn with low, even heat

Self-clean oven – Cleans the oven cavity without the need for scrubbing

Sealed cooktop burners – Contain spills and make cleaning quick and easy

In-oven broil - Healthy meals are hassle-free with in-oven broiling

5.0 cu. ft. oven capacity – Cook more dishes at once

Porcelain upswept cooktop – Raised edges contain spills, while the surface is easy to wipe clean

Model JGB450DEKWW – White on white

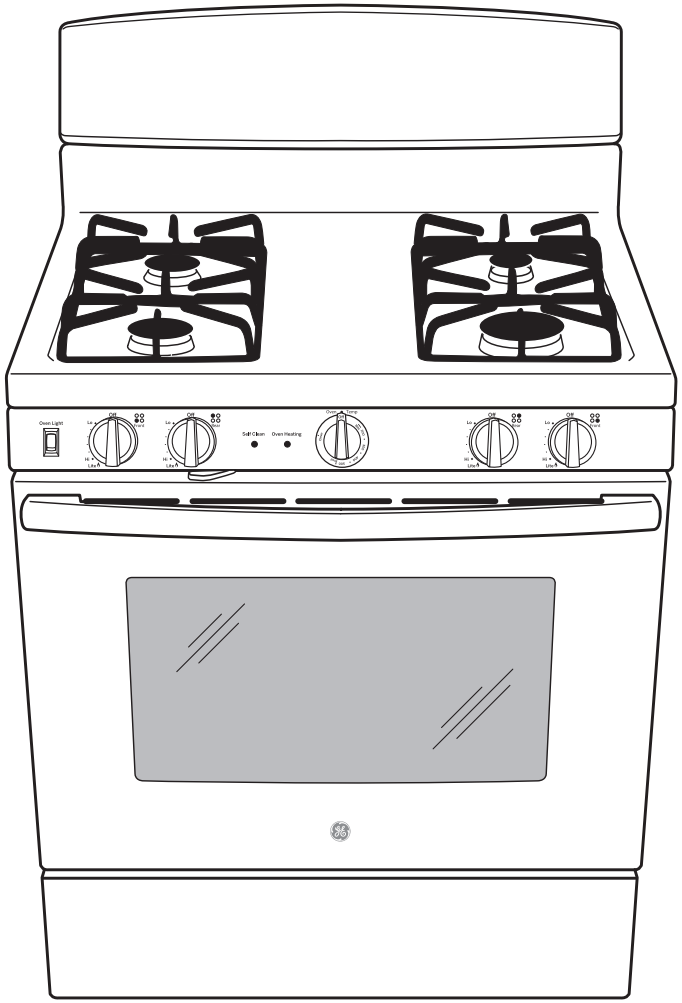

GE APPLIANCES

Specification Revised 2/16