Grab Bars

5600 & 5700 Series

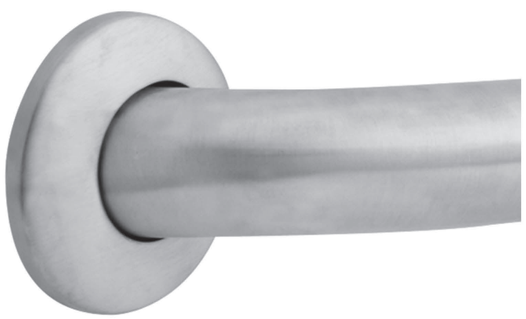

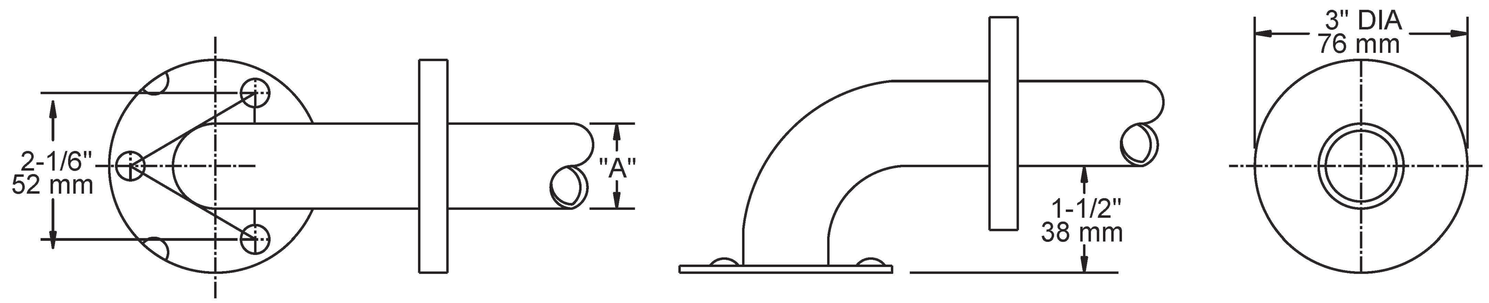

SERIES NO.	DIM "A"	12" (305 mm)	16" (406 mm)	18" (457 mm)	24" (609 mm)	30" (762 mm)	32" (812 mm)	36" (914 mm)	42" (1066 mm)	48" (1219 mm)
5600	1-1/2" O.D.	5612	5616	5618	5624	5630	5632	5636	5642	5648
5700	1-1/4" O.D.	5712	5716	5718	5724	5730	5732	5736	5742	5748

Dimensions shown are flange center to center distance.

MATERIALS: 5600 (1-1/2" O.D.) and 5700 (1-1/4" O.D.) tubing is (18 gauge) type 304 stainless steel with #4 satin finish. Wall Flanges are (14 gauge) type 304 stainless steel. Snap lock cover flanges are (20 gauge) stainless steel with #4 satin finish. Wall flanges are heliarc welded to tubing.

INSTALLATION: Install grab bar with 3 - #10 x 2-1/2" pan head stainless steel screws provided for each end wall flange and 2 - #10 x 2-1/2" pan head stainless steel screws provided for each center wall flange. Slide cover flanges over wall flanges and press firmly to complete installation.

OPTIONAL FASTENER INFORMATION:

Wood blocking is preferable behind all wall surfaces. If wood blocking is not available, the following fasteners are suggested: Tile/Masonry - Plastic or Lead Anchors, Plaster/Drywall - Toggle Bolts.

Note: 5600 and 5700 series grab bars are engineered to meet 1000 lb. pull (500 lb. pull for 5700PB series) when properly installed. 5600 and 5700 series meet ADA, and ANSI (A117.1-2003) for form and load bearing requirements.

SPECIFICATION: Surface mounted grab bar shall be model_____ (fill in model number) by Liberty Hardware Manufacturing Corporation.

SAFETY 1 FIRST®

A Liberty Hardware Brand

Liberty Hardware Manufacturing Corporation • 140 Business Park Drive • Winston-Salem, NC 27107 • 800.542.3789 • www.libertyhardware.com

©2009 LHMC, A Masco Company