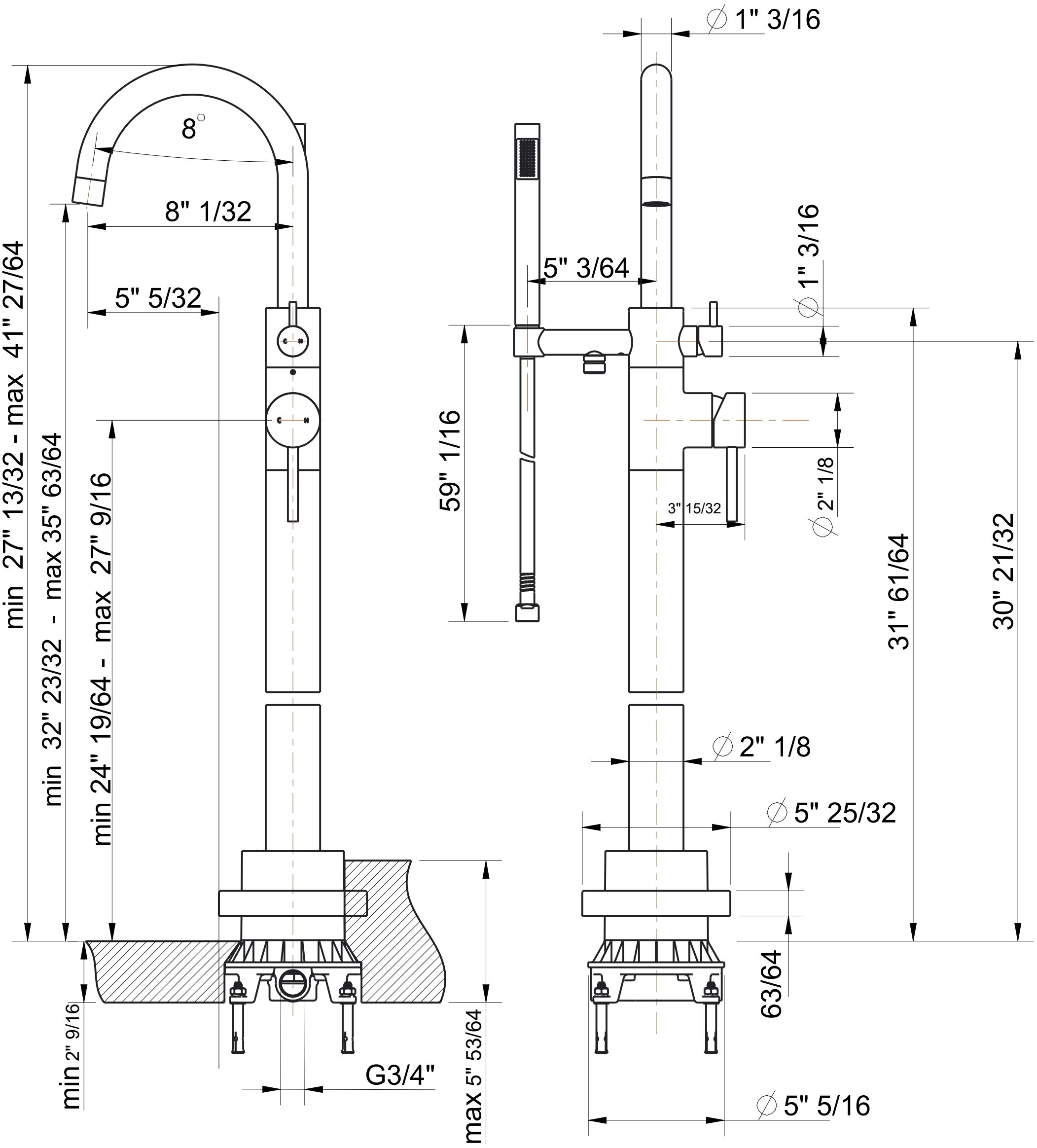
∅ 1" 3/16
8°
8" 1/32
5" 5/32
min 27" 13/32 - max 41" 27/64
min 32" 23/32 - max 35" 63/64
min 24" 19/64 - max 27" 9/16
59" 1/16
5" 3/64
1" 3/16
3" 15/32
2" 1/8
31" 61/64
30" 21/32
∅ 2" 1/8
∅ 5" 25/32
63/64
min 2" 9/16
G3/4"
max 5" 53/64
∅ 5" 5/16