FALCON

MA Series Service Manual

Grade 1 Mortise Lever and Knob Locks

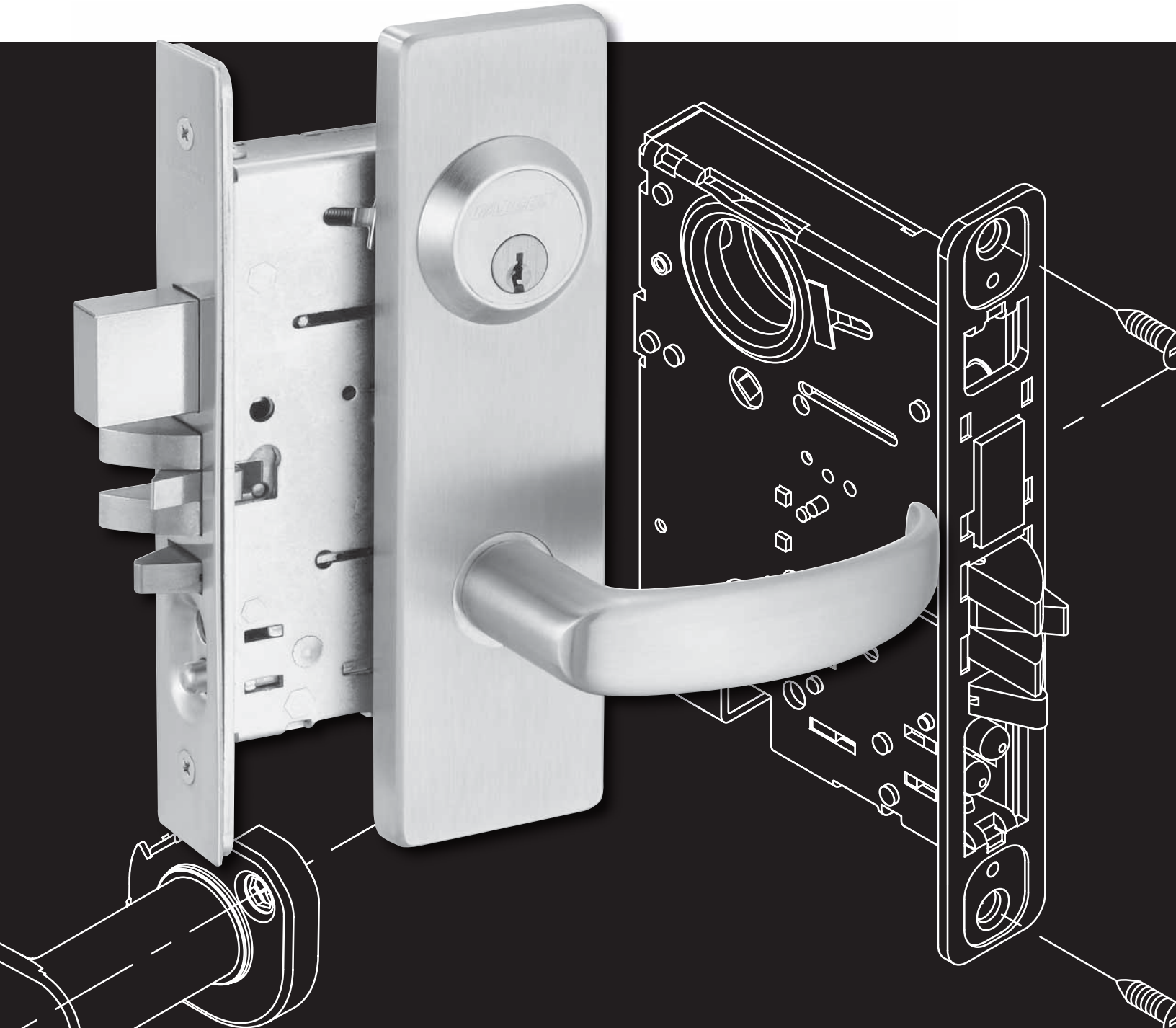

Table of Contents

Introduction....ii
Functions 2
MA101 - Passage or Closet Latch 5
MA161 - Exit or Communicating Lock 6
MA301 - Privacy, Bedroom/Bath 7
MA311 - Privacy, Bedroom/Bath 8
MA321 - Privacy, Bedroom/Bath 9
MA371 - Store Door Lock 10
MA381 - Apartment, Exit 11
MA411 - Asylum or Institutional Lock....12
MA431 - Intruder Dead Bolt Lock 13
MA441 - Intruder Latch Bolt Lock 14
MA451 - Hotel Guest Lock 15
MA521 - Entry Lock 16
MA531 - Apartment Corridor Door Lock.17
MA541 - Entry/Office Lock 18
MA551 - Holdback Lock....19
MA561 - Classroom Lock 20
MA571 - Dormitory or Exit Lock 21
MA581 - Storeroom / Closet Lock....22
MA621 - Front Door / Apartment Corridor 23
MA641 - Dormitory Lock 24
MA851 - Electrified EL - 12 & 24 VDC (Fail Safe)....25
MA881 - Electrified EU - 12 & 24 VDC (Fail Secure)....26
MA911 - Classroom Dead Lock 27
MA921 - Dead Lock....28
MA931 - Dead Lock....29
MA941 - Dead Lock....30
MA12 - Single Dummy 31
MA18 - Double Dummy....32
Knob and Lever Designs 33
MA-Series Screw Packs 34
Strikes....36
Cams....37
Mortise, Rim and Cam Lock for Standard Cylinders 39
Cylinder Collars 40
Trim Rings & Collars 41
Electrically Locking....42
Ordering Procedures....43
Installation Instructions 44

Introduction

This manual contains a complete listing of parts and assemblies for MA-Series mortise locks manufactured by Falcon Lock Company. This edition lists components of MA-Series locks manufactured after June, 2010. All lock case covers are labeled with dates to identify year of manufacture. Example: 12507 = the 125th day of 2007.

Exploded views of each lock function and trim assembly are provided with accompanying charts to identify parts for replacement purposes. Exploded views of trim are shown with parts for standard size doors. In addition, this manual provides lock trim ordering procedures, cylinder length charts by door range, and all auxiliary components of the MA-Series mortise locks.

Standard Features*

Certifications	ANSI A156 .13, Series 1000, Grade 1 Operation and Security, UL Listed for 3-hour fire door
Latch	2-piece brass mechanical anti-friction bolt, ¾” projection
Strike	1¼” x 4⅞”, ANSI, Square corner, with dust box
Cylinder	6-Pin solid brass, keyed 5-pin, Falcon G keyway, keyed different (KD)
Door Range	1⅜” – 2½” standard
Keys	Two, nickel silver cut keys per lock, Falcon G keyway
Backset	2¾”

* *Locks are furnished with standard features unless otherwise specified.*

Lock Assembly Drawing Index

The Lock Assembly Drawing Index provides visual representations and textual descriptions of available functions. Page numbers for full trim and chassis drawings are referenced.

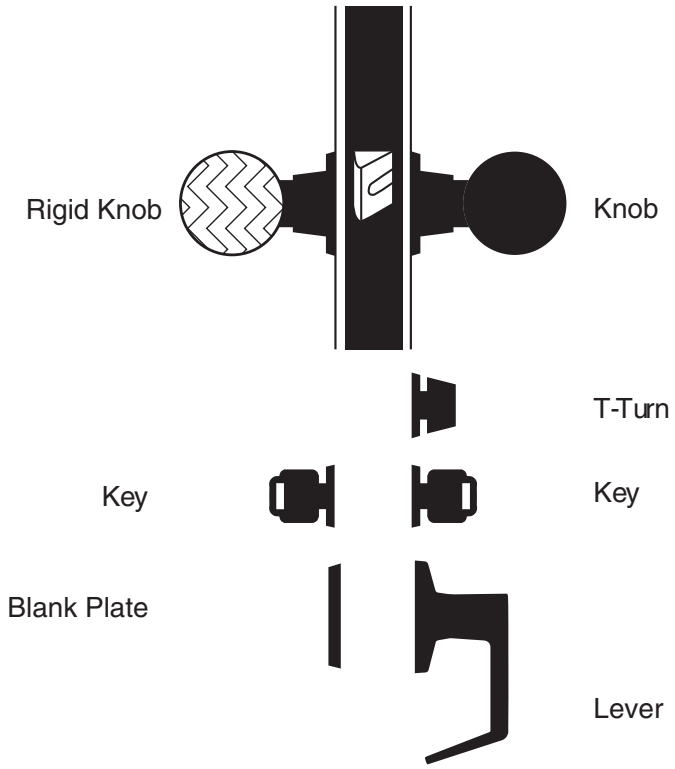

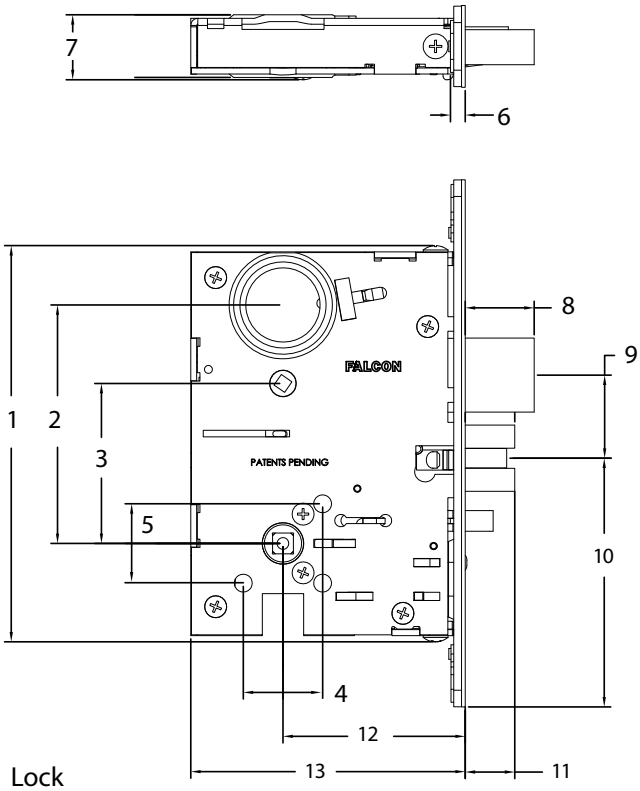

Lock

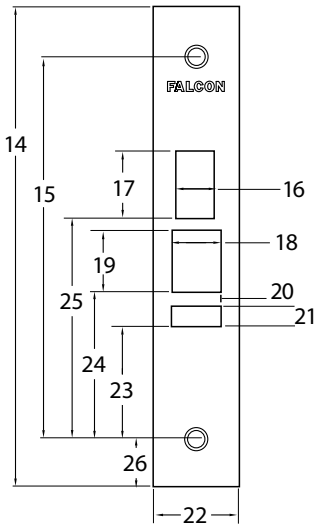

Faceplate

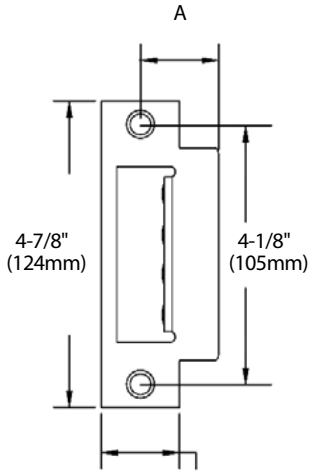

Strike

Lock	Dimension
1	6″ (152mm)
2	3-39/64″ (92mm)
3	2-27/64″ (62mm)
4	1-3/16″ (30mm)
5	1-3/16″ (30mm)
6	1/4″ (6mm)
7	1″ (25mm)
8	1″ (25mm)
9	1-17/64″ (32mm)
10	3-49/64″ (96mm)
11	3/4″ (19mm)
12	2-3/4″ (70mm)
13	4-5/32″ (106mm)

Faceplate	Dimension
14	8″ (203mm)
15	6-3/8″ (162mm)
16	9/16″ (14mm)
17	1-9/64″ (29mm)
18	45/64″ (18mm)
19	1-1/32″ (26mm)
20	1/4″ (6mm)
21	11/32″ (9mm)
22	1-1/4″ (32mm)
23	1-27/32″ (47mm)
24	2-7/16″ (62mm)
25	3-21/32″ (93mm)
26	25/32″ (20mm)

Strike	
(A) Door Thickness	Lip Size
1-3/4″ – 1-7/8″	1-1/4″ (32mm)
2″ – 2-1/8″	1-7/16″ (37mm)
2-1/4″ – 2-3/8″	1-9/16″ (40mm)
2-1/2″ – 2-5/8″	1-11/16″ (43mm)

To order Falcon MA-Series locksets, please consult page 43 for ordering information and assistance.

Catalog Number Prefixes: Add the following prefix for the appropriate trim style.

Function			ANSI A156.13, 2005		Page
SCHLAGE	**ANSI**	**DESCRIPTION**	**FUNCTION**		
MA101	F01	Passage/Closet Latchset	Latch bolt by knob/levers at all times.		5
MA161	F31	Connecting Room/Exit Latch	Latch bolt operated by knob/lever from inside. No trim outside. Auxiliary dead latch.		6
MA301	F02	Privacy Lock	Latch bolt by knobs/levers either side, dead bolt by turn inside or emergency release outside.		7
MA311	F19	Privacy, Bedroom or Bath Lock	Latch bolt by knobs/levers. Deadbolt by turn from inside and emergency release outside. Rotating inside knob/lever retracts both bolts.		8
MA321	F22	Privacy Lock	Latch bolt operated by knob/lever from either side except when outside knob/lever is locked by inside T-turn. Operating inside knob/lever, closing door or operating outside emergency release unlocks outside knob/lever.		9
MA371	F14	Store Door Lock	Latch bolt by knobs/levers. Deadbolt by key from either side. Throwing deadbolt locks latchbot from either side.		10
MA381	F09	Apartment, Exit Lock	Latch bolt operated by knob/lever from either side, except when outside knob/lever is locked by key from inside. When outside knob/lever is locked, latch bolt is retracted by key from outside or by operating inside lever. Auxiliary dead latch.		11
MA411	F30	Asylum Lock	Latch bolt operated by key from either side. Both knobs/levers always inoperative. Auxiliary dead latch.	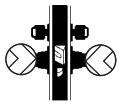	12
MA431	F34	Intruder Deadbolt Lock	Latch bolt operated by knob/lever from either side except when outside knob/lever is locked from inside or outside by key. Dead bolt retracted by key from inside or outside. Operating inside knob/lever retracts both bolts and unlocks outside. Latch bolt dead locked when dead bolt is thrown.		13
MA441	F32	Intruder Latchbolt Lock	Latch bolt operated by knob/lever from either side except when outside knob/lever is locked from inside or outside by key. When outside knob/lever is locked, latch bolt is retracted by key from inside or outside or by operating inside knob/lever. Auxiliary dead latch.		14

Function			ANSI A156.13, 2005		Page
SCHLAGE	**ANSI**	**DESCRIPTION**	**FUNCTION**		
MA451	F15	Hotel/Guest Lock	Latch bolt operated by key from outside or by operating inside knob/lever. Outside knob/lever is always inoperative. Dead bolt projected by turn from inside and all keys except emergency key are shut out. Operating inside knob/lever retracts both bolts. Auxiliary dead latch.		15
MA521	F04	Entry/Office Lock	Latch bolt operated by knob/lever from either side except when outside knob/lever is made inoperative by buttons in face. When outside knob/lever is locked, latch bolt is retracted by key from outside or by operating inside knob/ lever. Auxiliary dead latch.		16
MA531	F12, F20	Apartment Corridor Door Lock	Latch bolt operated by knob/lever from either side, except when outside knob/lever is made inoperative by buttons in face. Dead bolt operated by key outside or turn inside. Key outside operates both bolts. Operating inside knob/lever retracts both bolts and outside remains locked. Latch bolt is deadlocked when outside knob/lever is made inoperative or when the dead bolt is projected. When dead bolt is retracted, knob/lever is unlocked by buttons in face.		17
MA541	F21	Entry/Office Lock	Latch bolt by knobs/levers either side. Deadbolt by key outside or turn inside.		18
MA551	F06	Holdback Lock	Latch bolt operated by lever from either side except when outside lever is locked from outside by key. Latch bolt can be locked in a retracted position by key. When outside lever is locked, latch bolt is retracted by key from outside or by operating inside lever unless latch bolt has been locked in a retracted position. Auxiliary dead latch. Activate/ Deactivate instructions on page Note: Chassis is handed. For Holdback Activation instructions see page 48.		19
MA561	F05	Classroom Lock	Latch bolt operated by knob/lever from either side except when outside knob/lever is locked by key. When outside knob/lever is locked, latchbolt is retracted by key from outside or by operating inside knob/lever. Auxiliary latch deadlocks latch bolt when door is closed. Inside knob/lever always free for immediate use.		20
MA571	F13	Dormitory or Exit Lock	Latch bolt operated by knob/lever from either side. Dead bolt projected by key from outside and turn from inside. Operating inside knob/ lever retracts both bolts and unlocks outside.		21

Function			ANSI A156.13, 2005		Page
SCHLAGE	**ANSI**	**DESCRIPTION**	**FUNCTION**		
MA581	F07	Storeroom Lock	Latch bolt operated by key from outside or by operating inside knob/lever. Outside knob/lever is always inoperative. Auxiliary dead latch.		22
MA621	F08/ F10	Front Door/ Apartment Corridor	Latch bolt is operated by knob/lever from either side except when outside knob/lever is made inoperative by buttons in face. Dead bolt is operated by turn inside. Key outside operates both bolts.		23
MA641	-	Dormitory Lock	Latch bolt by knob/lever inside and key outside. Inside knob/lever free. Outside knob/lever rigid. Dead bolt by key outside or T-turn inside. Rotating inside knob/lever retracts both bolts. Deadlocking latch.		24
MA851	-	Storeroom - Fail Safe EL	Latch bolt operated by knob/lever from either side except when outer knob/lever is electrically locked. When outer knob/lever is locked, latch bolt retracted by key outside. Deadlocking latch.		25
MA881	-	Storeroom - Fail Secure EU	Latch bolt operated by knob/lever from inside except when outer knob/lever is electrically unlocked, then latch bolt from either side. When locked, key outside retracts latch bolt. Deadlocking latch.		26
MA911	F29	Classroom Deadlock	Key from outside operates deadbolt. Turn from inside retracts but does not project dead bolt.		27
MA921	F18	Deadlock	Deadbolt by key outside only.		28
MA931	F16	Deadlock	Deadbolt by key from either side.		29
MA941	F17	Deadlock	Deadbolt by key outside or turn inside.		30
MA12/ MA18	-	Dummy Trim	Single or double available. SIngle (MA12). Double (MA18).	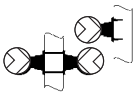	31 32

MA101 - Passage or Closet Latch

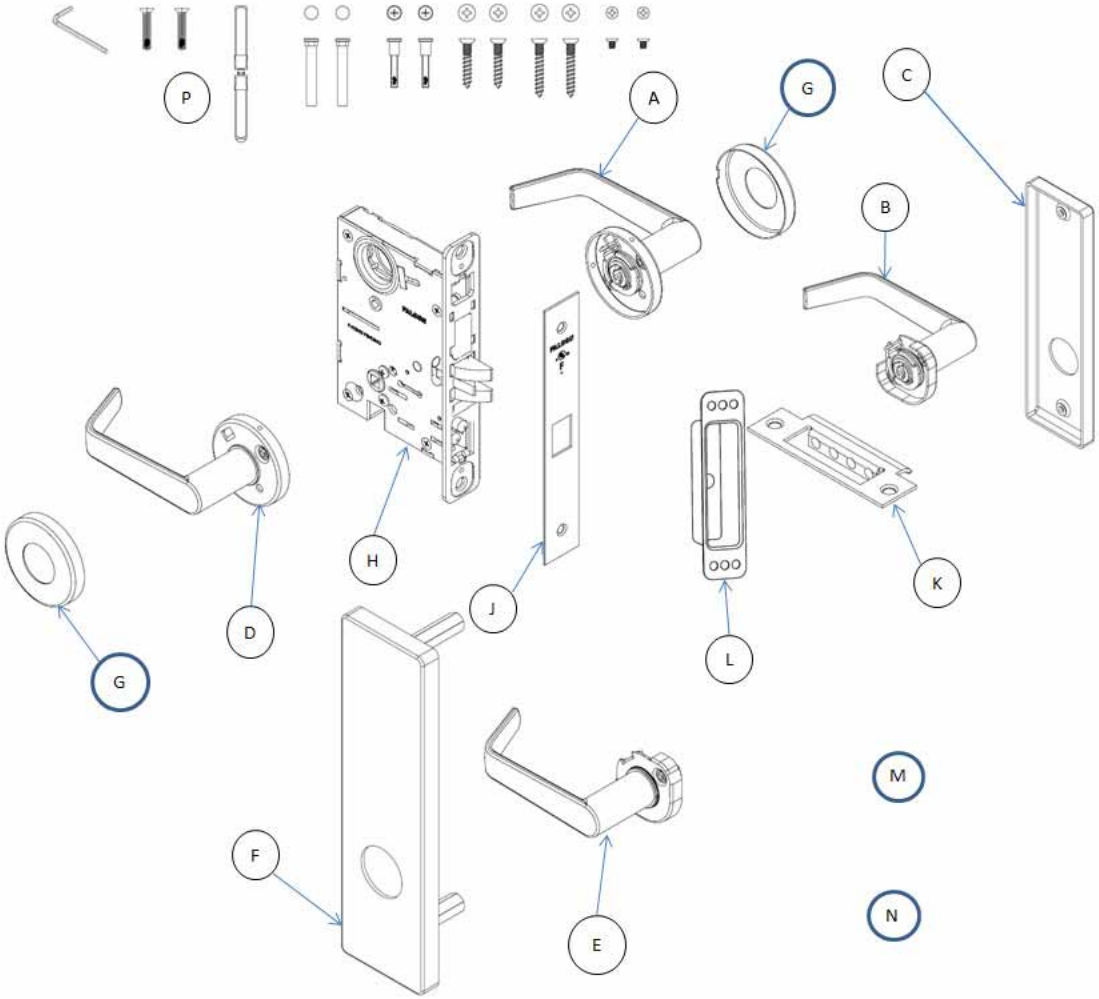

Description			Trim				
			Lever				Knob
			Dane	Sutro	Avalon	Quantum	Hana
INSIDE TRIM	KNOB/LEVER SECTIONAL	A	AS76280	AS76526	AS76029	AS76140	AS76100
	KNOB/LEVER ESCUTCHEON	B	AE77280	AE77526	AE77029	AE77140	AE77100
	ESCUTCHEON	C	E77012-IP				
OUTSIDE TRIM	KNOB/LEVER SECTIONAL	D	AS76280	AS76526	AS76029	AS76140	AS76100
	KNOB/LEVER ESCUTCHEON	E	AE77280	AE77526	AE77029	AE77140	AE77100
	ESCUTCHEON	F	AE77012-0P				
ROSE (2 REQ'D)		G	S76012				
ASSY, LOCK UNIT		H	A7801				
FACEPLATE		J	S77801				
STRIKE ASSY		K	A8737-1				
STRIKE BOX		L	PE1396				
DOOR MARKER		M	Q513-068				
INSTRUCTION SHEETS		N	Q513-067				
SCREW PACK		P	*See page 34*				

MA161 - Exit or Communicating Lock

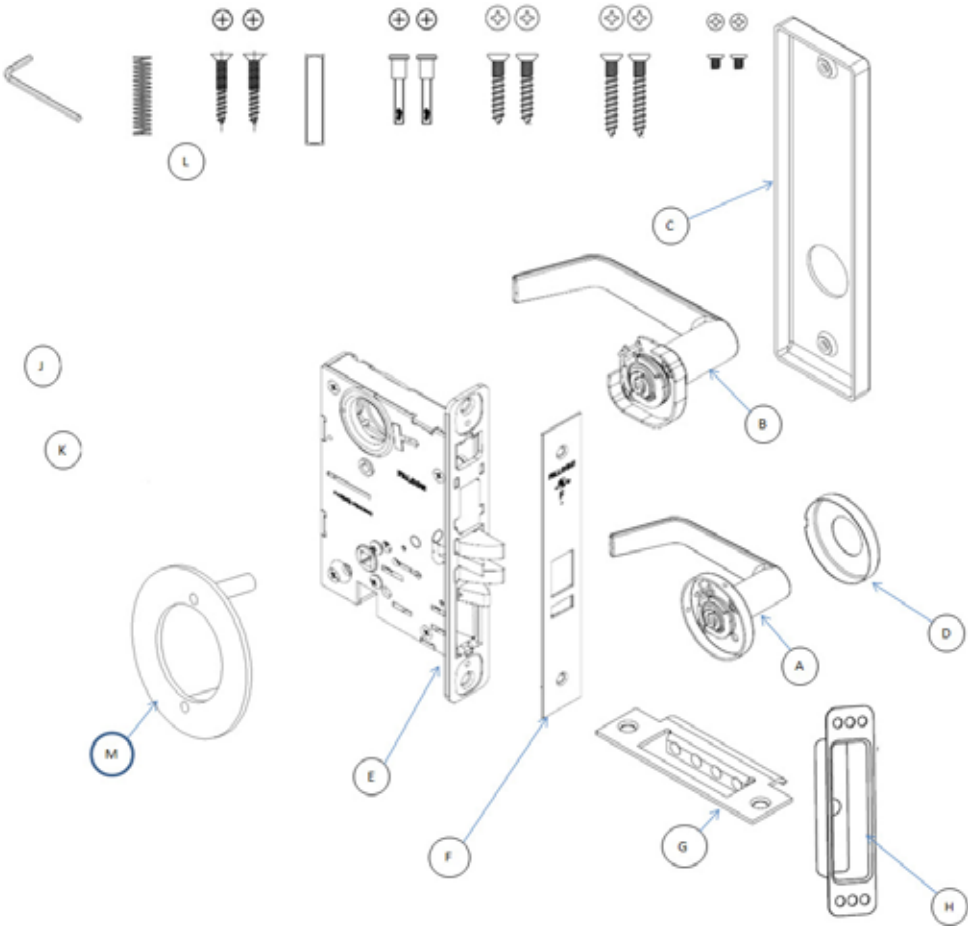

Description			Trim				
			Lever				Knob
			Dane	Sutro	Avalon	Quantum	Hana
INSIDE TRIM	KNOB/LEVER SECTIONAL	A	AS76280	AS76526	AS76029	AS76140	AS76100
	KNOB/LEVER ESCUTCHEON	B	AE77280	AE77526	AE77029	AE77140	AE77100
	ESCUTCHEON	C	E77012-IP				
OUTSIDE TRIM	KNOB/LEVER SECTIONAL	-	N/A	N/A	N/A	N/A	N/A
	KNOB/LEVER ESCUTCHEON	-	N/A	N/A	N/A	N/A	N/A
	ESCUTCHEON	-	N/A				
ROSE		D	S76012				
ASSY, LOCK UNIT		E	A7831				
FACEPLATE		F	S77805				
STRIKE ASSY		G	A8737-1				
STRIKE BOX		H	PE1396				
DOOR MARKER		J	Q513-068				
INSTRUCTION SHEETS		K	Q513-067				
SCREW PACK		L	*See page 34*				
PLATE		M	AS5813				

MA301 - Privacy, Bedroom/Bath

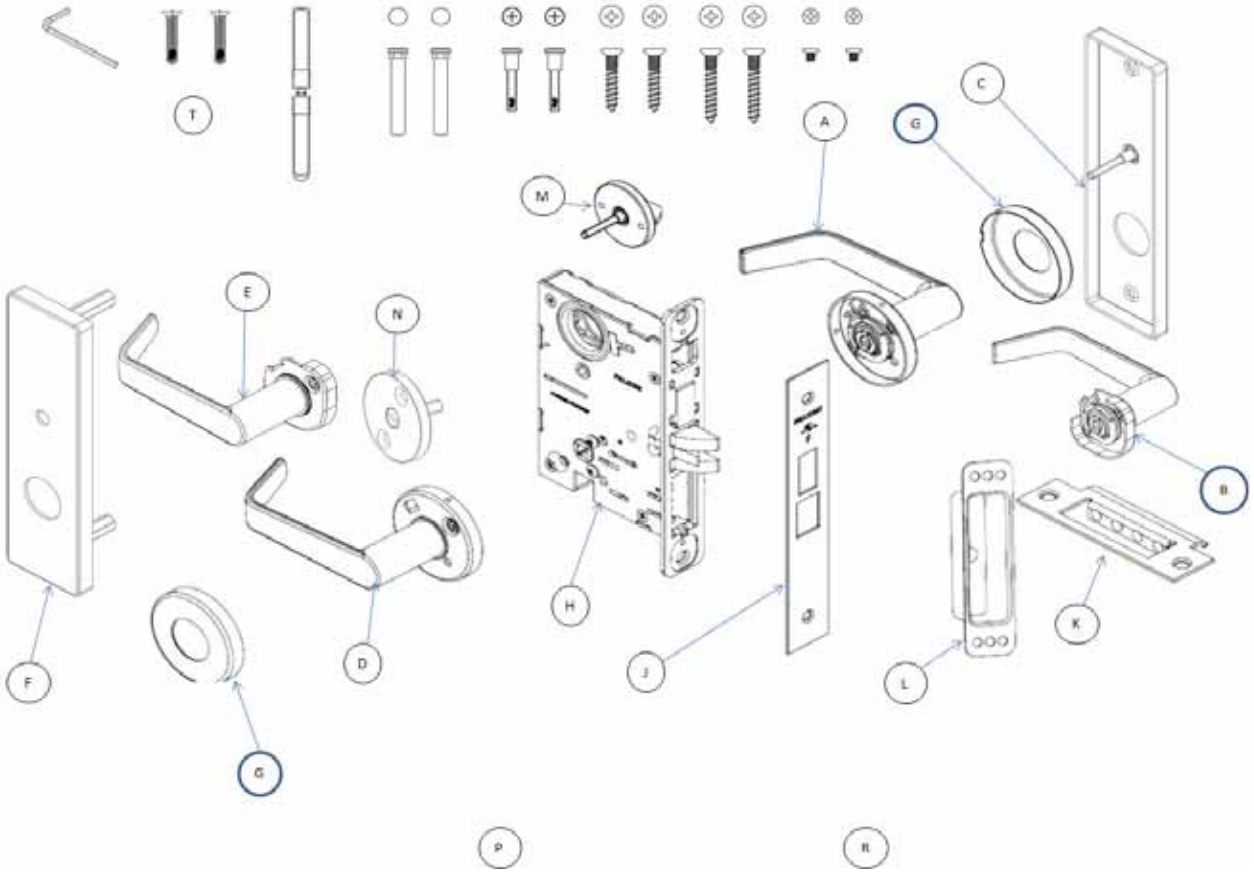

Description			Trim				
			Lever				Knob
			Dane	Sutro	Avalon	Quantum	Hana
INSIDE TRIM	KNOB/LEVER SECTIONAL	A	AS76280	AS76526	AS76029	AS76140	AS76100
	KNOB/LEVER ESCUTCHEON	B	AE77280	AE77526	AE77029	AE77140	AE77100
	ESCUTCHEON	C	AE77012-IT				
OUTSIDE TRIM	KNOB/LEVER SECTIONAL	D	AS76280	AS76526	AS76029	AS76140	AS76100
	KNOB/LEVER ESCUTCHEON	E	AE77280	AE77526	AE77029	AE77140	AE77100
	ESCUTCHEON	F	AE77012-OT				
ROSE (2 REQ'D)		G	S76012				
ASSY, LOCK UNIT		H	A7802				
FACEPLATE		J	S77819				
STRIKE ASSY		K	A8737-1				
STRIKE BOX		L	PE1396				
THUMB TURN		M	AS76319				
EMERGENCY TURN		N	AS76853				
DOOR MARKER		P	Q513-068				
INSTRUCTION SHEETS		R	Q513-067				
SCREW PACK		T	*See page 34*				

MA311 - Privacy, Bedroom/Bath

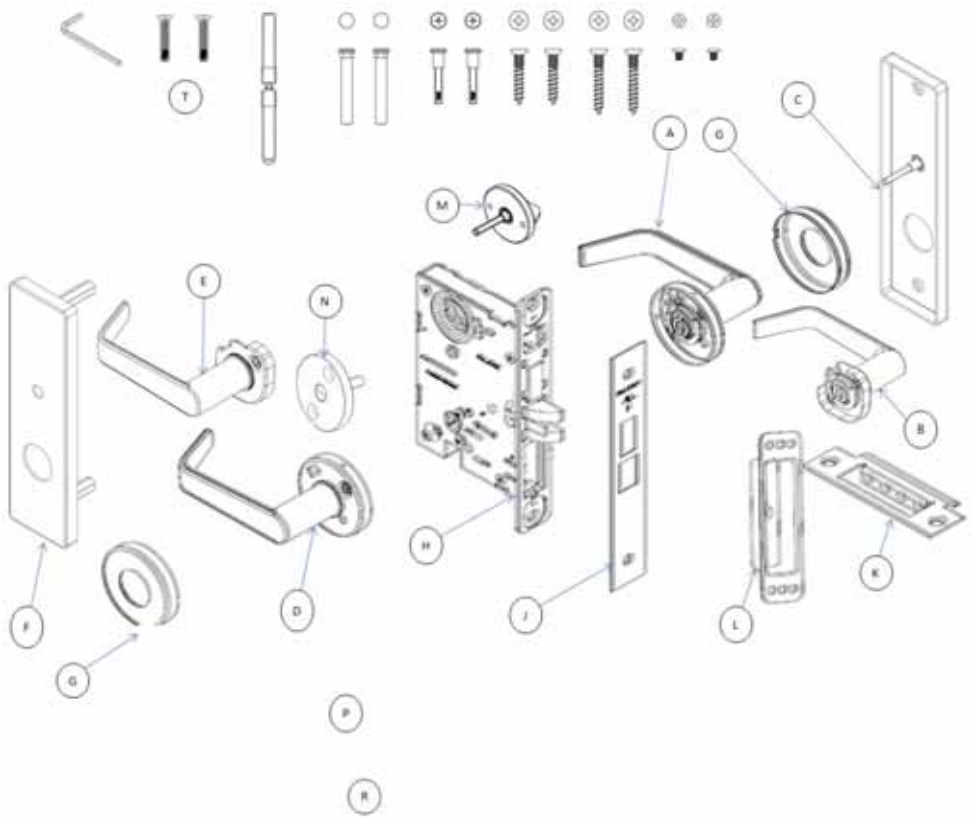

Description			Trim				
			Lever				Knob
			Dane	Sutro	Avalon	Quantum	Hana
INSIDE TRIM	KNOB/LEVER SECTIONAL	A	AS76280	AS76526	AS76029	AS76140	AS76100
	KNOB/LEVER ESCUTCHEON	B	AE77280	AE77526	AE77029	AE77140	AE77100
	ESCUTCHEON	C	AE77012-IT				
OUTSIDE TRIM	KNOB/LEVER SECTIONAL	D	AS76280	AS76526	AS76029	AS76140	AS76100
	KNOB/LEVER ESCUTCHEON	E	AE77280	AE77526	AE77029	AE77140	AE77100
	ESCUTCHEON	F	AE77012-OT				
ROSE (2 REQ'D)		G	S76012				
ASSY, LOCK UNIT		H	A7819				
FACEPLATE		J	S77819				
STRIKE ASSY		K	A8737-1				
STRIKE BOX		L	PE1396				
THUMB TURN		M	AS76319				
EMERGENCY TURN		N	AS76853				
DOOR MARKER		P	Q513-068				
INSCTRUCTION SHEETS		R	Q513-067				
SCREW PACK		T	*See page 34*				

MA321 - Privacy, Bedroom/Bath

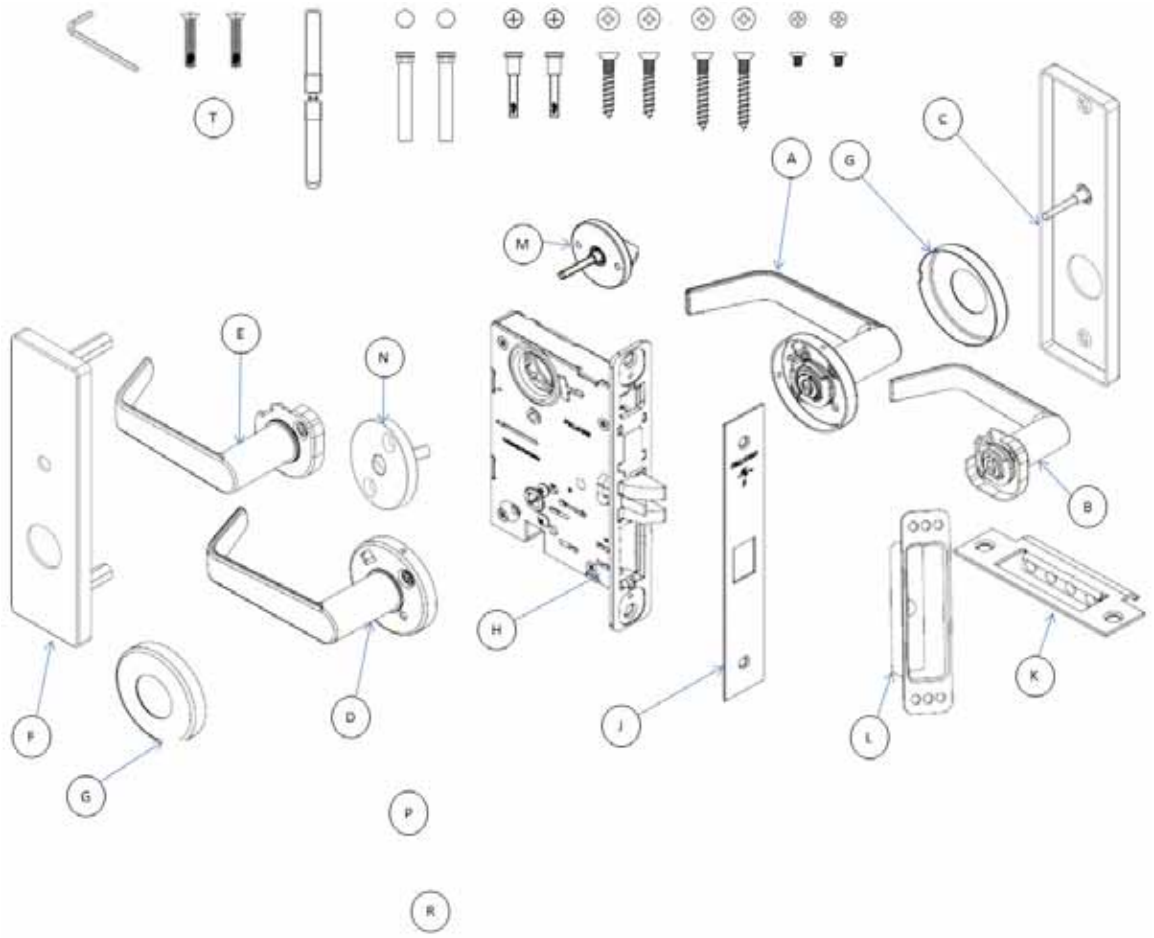

Description			Trim				
			Lever				Knob
			Dane	Sutro	Avalon	Quantum	Hana
INSIDE TRIM	KNOB/LEVER SECTIONAL	A	AS76280	AS76526	AS76029	AS76140	AS76100
	KNOB/LEVER ESCUTCHEON	B	AE77280	AE77526	AE77029	AE77140	AE77100
	ESCUTCHEON	C	AE77012-IT				
OUTSIDE TRIM	KNOB/LEVER SECTIONAL	D	AS76280	AS76526	AS76029	AS76140	AS76100
	KNOB/LEVER ESCUTCHEON	E	AE77280	AE77526	AE77029	AE77140	AE77100
	ESCUTCHEON	F	AE77012-OT				
ROSE (2 REQ'D)		G	S76012				
ASSY, LOCK UNIT		H	A7822				
FACEPLATE		J	S77801				
STRIKE ASSY		K	A8737-1				
STRIKE BOX		L	PE1396				
THUMB TURN		M	AS76319				
EMERGENCY TURN		N	AS76853				
DOOR MARKER		P	Q513-068				
INSTRUCTION SHEETS		R	Q513-067				
SCREW PACK		T	*See page 34*				

MA371 - Store Door Lock

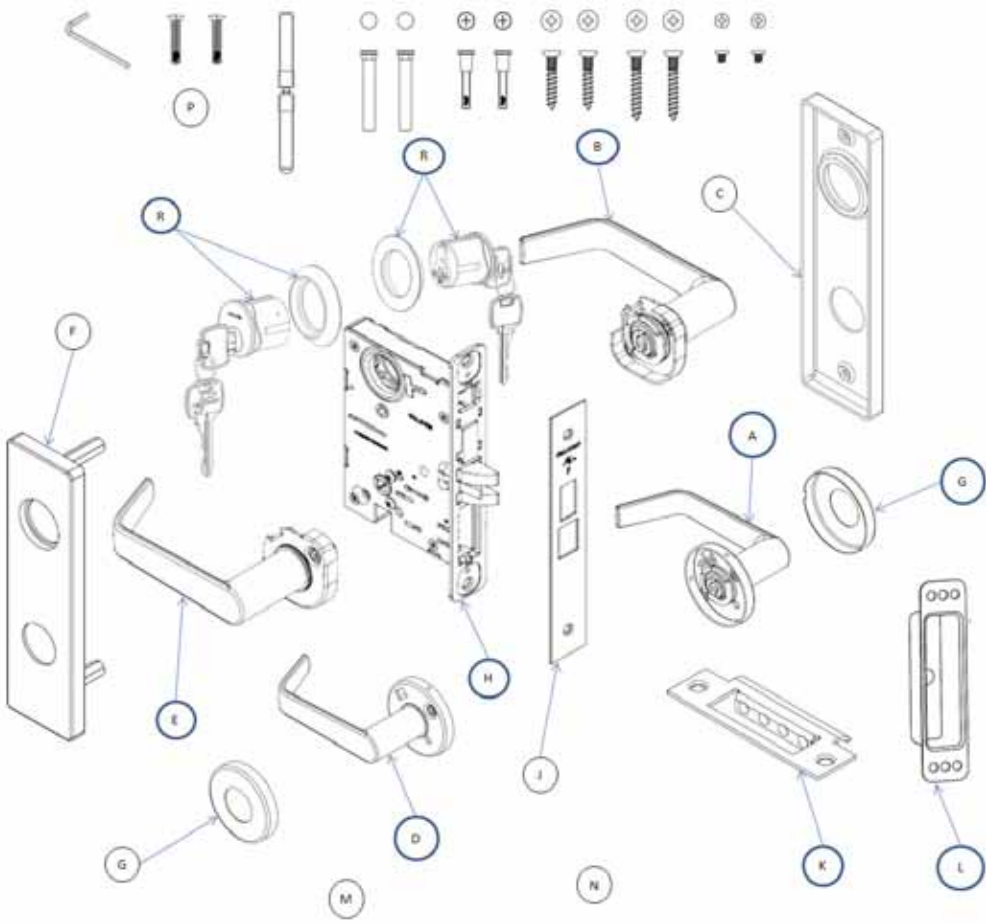

SFIC Not Shown

Description			Trim				
			Lever				Knob
			Dane	Sutro	Avalon	Quantum	Hana
INSIDE TRIM	KNOB/LEVER SECTIONAL	A	AS76280	AS76526	AS76029	AS76140	AS76100
	KNOB/LEVER ESCUTCHEON	B	AE77280	AE77526	AE77029	AE77140	AE77100
	ESCUTCHEON	C	E77012-IC				
OUTSIDE TRIM	KNOB/LEVER SECTIONAL	D	AS76280	AS76526	AS76029	AS76140	AS76100
	KNOB/LEVER ESCUTCHEON	E	AE77280	AE77526	AE77029	AE77140	AE77100
	ESCUTCHEON	F	AE77012-OC				
ROSE (2 REQ'D)		G	S76012				
ASSY, LOCK UNIT		H	A7814				
FACEPLATE		J	S77819				
STRIKE ASSY		K	A8737-1				
STRIKE BOX		L	PE1396				
DOOR MARKER		M	Q513-068				
INSTRUCTION SHEETS		N	Q513-067				
SCREW PACK		P	*See page 34*				
CYLINDER, CONVENTIONAL (2 REQ'D)		R	*See Cylinder Chart on page 39*				
CYLINDER, SFIC (2 REQ'D)							

MA381 - Apartment, Exit

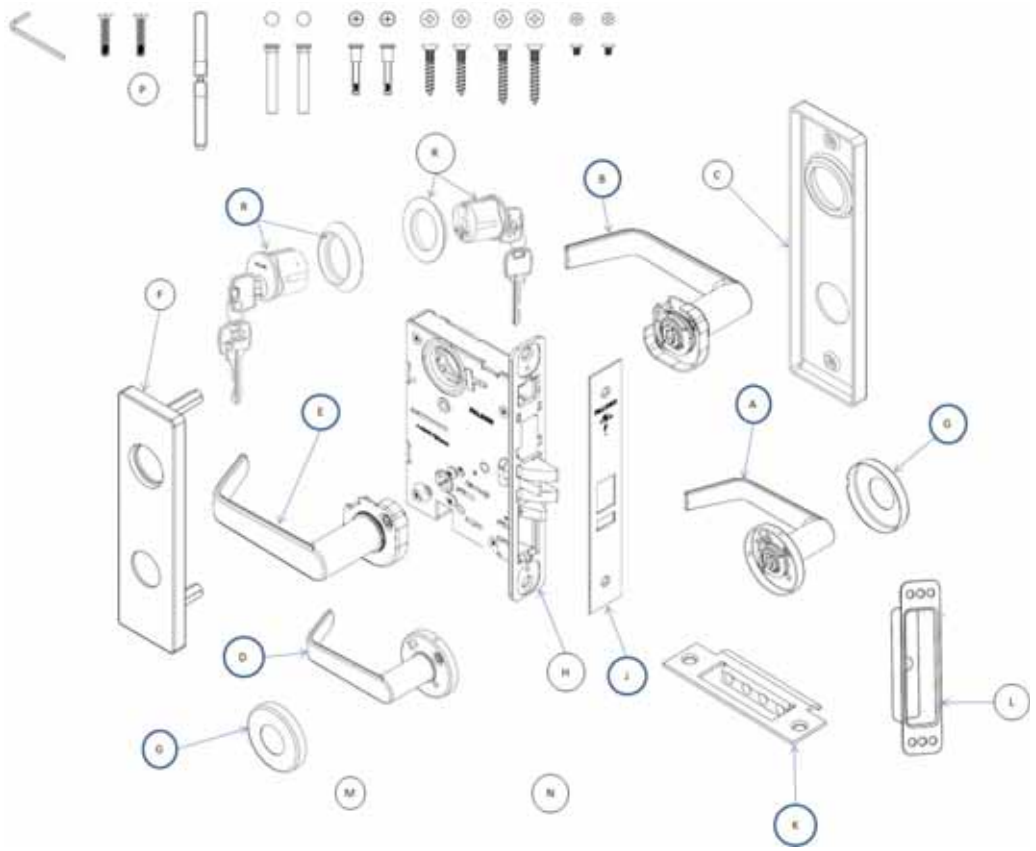

SFIC Not Shown

Description			Trim				
			Lever				Knob
			Dane	Sutro	Avalon	Quantum	Hana
INSIDE TRIM	KNOB/LEVER SECTIONAL	A	AS76280	AS76526	AS76029	AS76140	AS76100
	KNOB/LEVER ESCUTCHEON	B	AE77280	AE77526	AE77029	AE77140	AE77100
	ESCUTCHEON	C	E77012-IC				
OUTSIDE TRIM	KNOB/LEVER SECTIONAL	D	AS76280	AS76526	AS76029	AS76140	AS76100
	KNOB/LEVER ESCUTCHEON	E	AE77280	AE77526	AE77029	AE77140	AE77100
	ESCUTCHEON	F	AE77012-OC				
ROSE (2 REQ'D)		G	S76012				
ASSY, LOCK UNIT		H	A7809				
FACEPLATE		J	S77805				
STRIKE ASSY		K	A8737-1				
STRIKE BOX		L	PE1396				
DOOR MARKER		M	Q513-068				
INSTRUCTION SHEETS		N	Q513-067				
SCREW PACK		P	*See page 34*				
CYLINDER, CONVENTIONAL (2 REQ'D)		R	*See Cylinder Chart on page 39*				
CYLINDER, SFIC (2 REQ'D)							

MA411 - Asylum or Institutional Lock

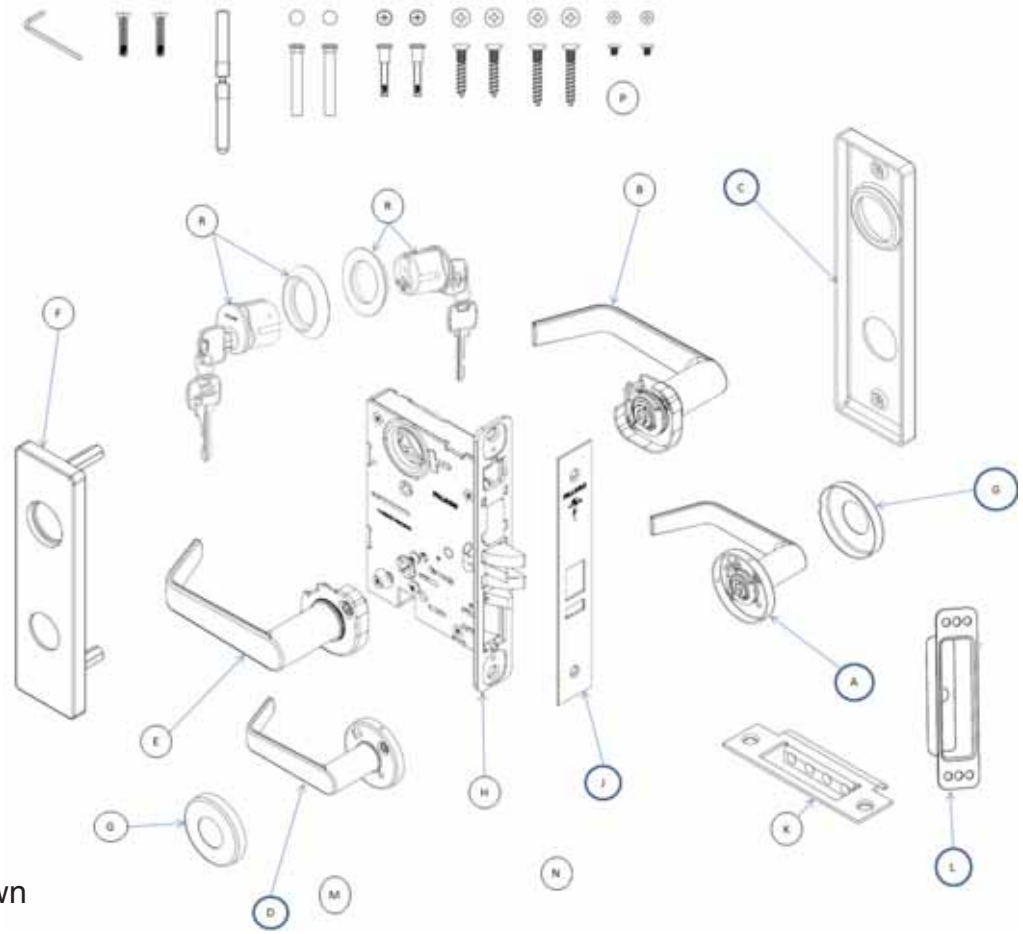

SFIC Not Shown

Description			Trim				
			Lever				Knob
			Dane	Sutro	Avalon	Quantum	Hana
INSIDE TRIM	KNOB/LEVER SECTIONAL	A	AS76280	AS76526	AS76029	AS76140	AS76100
	KNOB/LEVER ESCUTCHEON	B	AE77280	AE77526	AE77029	AE77140	AE77100
	ESCUTCHEON	C	E77012-IC				
OUTSIDE TRIM	KNOB/LEVER SECTIONAL	D	AS76280	AS76526	AS76029	AS76140	AS76100
	KNOB/LEVER ESCUTCHEON	E	AE77280	AE77526	AE77029	AE77140	AE77100
	ESCUTCHEON	F	AE77012-OC				
ROSE (2 REQ'D)		G	S76012				
ASSY, LOCK UNIT		H	A7830				
FACEPLATE		J	S77805				
STRIKE ASSY		K	A8737-1				
STRIKE BOX		L	PE1396				
DOOR MARKER		M	Q513-068				
INSTRUCTION SHEETS		N	Q513-067				
SCREW PACK		P	*See page 34*				
CYLINDER, CONVENTIONAL (2 REQ'D)		R	*See Cylinder Chart on page 39*				
CYLINDER, SFIC (2 REQ'D)							

MA431 - Intruder Dead Bolt Lock

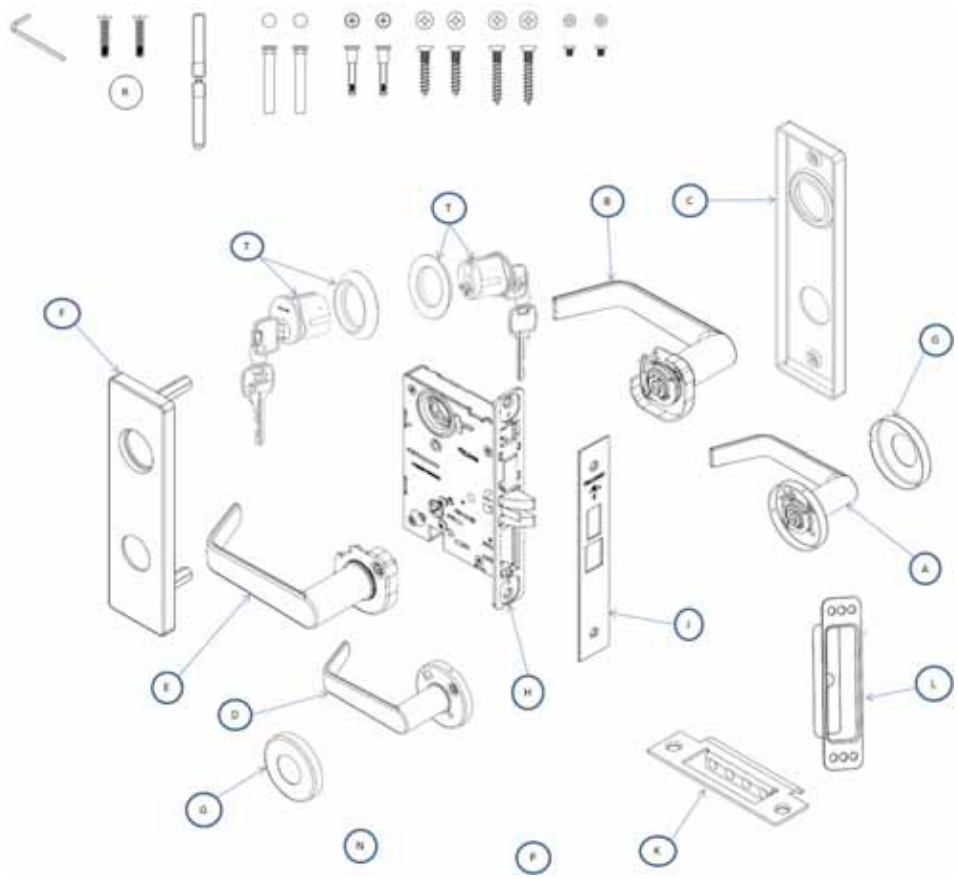

SFIC Not Shown

Description			Trim				
			Lever				Knob
			Dane	Sutro	Avalon	Quantum	Hana
INSIDE TRIM	KNOB/LEVER SECTIONAL	A	AS76280	AS76526	AS76029	AS76140	AS76100
	KNOB/LEVER ESCUTCHEON	B	AE77280	AE77526	AE77029	AE77140	AE77100
	ESCUTCHEON	C	E77012-IC				
OUTSIDE TRIM	KNOB/LEVER SECTIONAL	D	AS76280	AS76526	AS76029	AS76140	AS76100
	KNOB/LEVER ESCUTCHEON	E	AE77280	AE77526	AE77029	AE77140	AE77100
	ESCUTCHEON	F	AE77012-OC				
ROSE (2 REQ'D)		G	S76012				
ASSY, LOCK UNIT		H	A7813				
FACEPLATE		J	S77819				
STRIKE ASSY		K	A8737-1				
STRIKE BOX		L	PE1396				
DOOR MARKER		N	Q513-068				
INSTRUCTION SHEETS		P	Q513-067				
SCREW PACK		R	*See page 34*				
CYLINDER, CONVENTIONAL (2 REQ'D)		T	*See Cylinder Chart on page 39*				
CYLINDER, SFIC (2 REQ'D)							

MA441 - Intruder Latch Bolt Lock

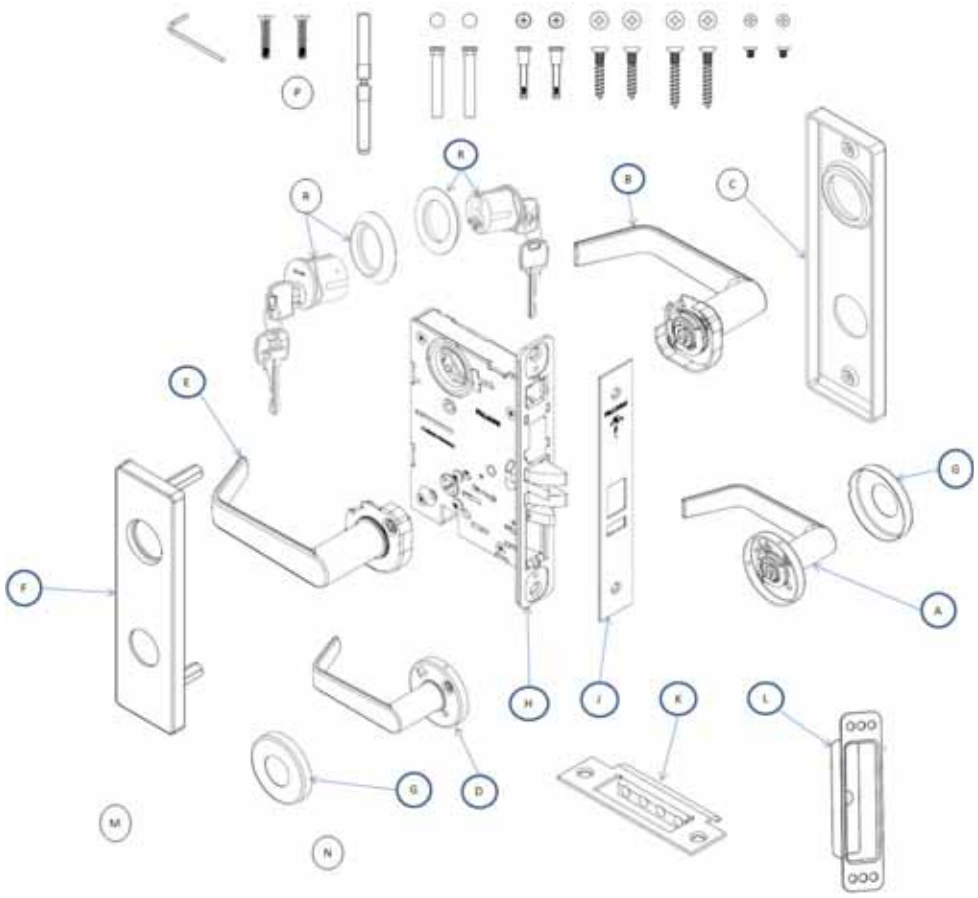

SFIC Not Shown

Description			Trim				
			Lever				Knob
			Dane	Sutro	Avalon	Quantum	Hana
INSIDE TRIM	KNOB/LEVER SECTIONAL	A	AS76280	AS76526	AS76029	AS76140	AS76100
	KNOB/LEVER ESCUTCHEON	B	AE77280	AE77526	AE77029	AE77140	AE77100
	ESCUTCHEON	C	E77012-IC				
OUTSIDE TRIM	KNOB/LEVER SECTIONAL	D	AS76280	AS76526	AS76029	AS76140	AS76100
	KNOB/LEVER ESCUTCHEON	E	AE77280	AE77526	AE77029	AE77140	AE77100
	ESCUTCHEON	F	AE77012-OC				
ROSE (2 REQ'D)		G	S76012				
ASSY, LOCK UNIT		H	A7832				
FACEPLATE		J	S77805				
STRIKE ASSY		K	A8737-1				
STRIKE BOX		L	PE1396				
DOOR MARKER		M	Q513-068				
INSTRUCTION SHEETS		N	Q513-067				
SCREW PACK		P	*See page 34*				
CYLINDER, CONVENTIONAL (2 REQ'D)		R	*See Cylinder Chart on page 39*				
CYLINDER, SFIC (2 REQ'D)							

MA451 - Hotel Guest Lock

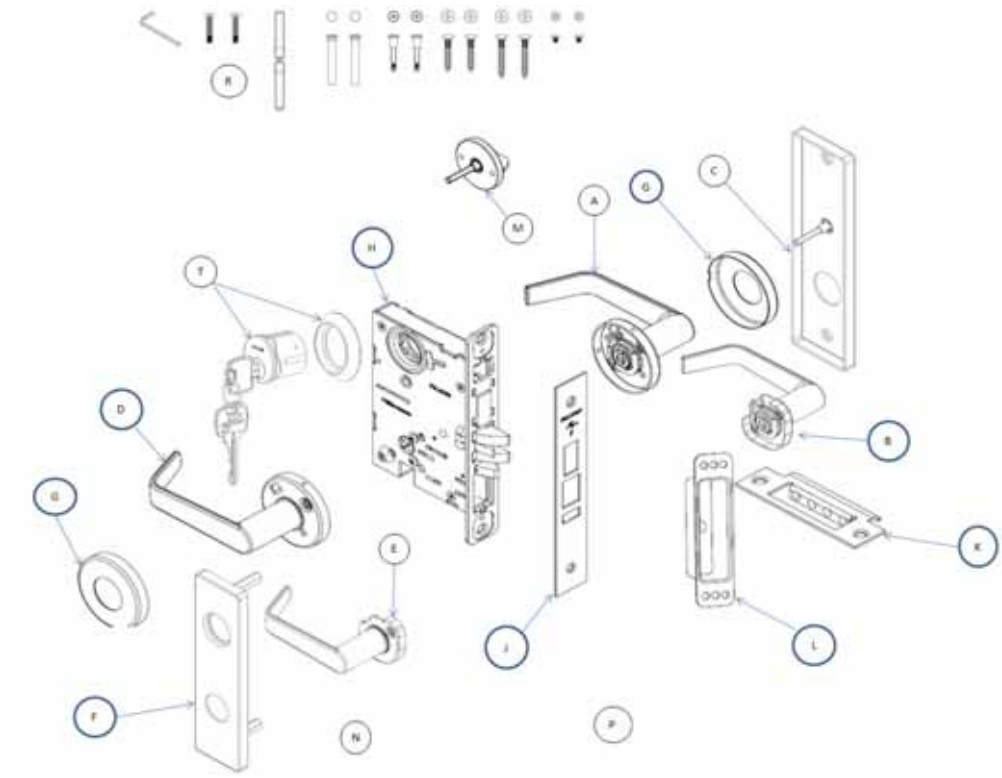

SFIC Not Shown

Description			Trim				
			Lever				Knob
			Dane	Sutro	Avalon	Quantum	Hana
INSIDE TRIM	KNOB/LEVER SECTIONAL	A	AS76280	AS76526	AS76029	AS76140	AS76100
	KNOB/LEVER ESCUTCHEON	B	AE77280	AE77526	AE77029	AE77140	AE77100
	ESCUTCHEON	C	AE77012-IT				
OUTSIDE TRIM	KNOB/LEVER SECTIONAL	D	AS76280	AS76526	AS76029	AS76140	AS76100
	KNOB/LEVER ESCUTCHEON	E	AE77280	AE77526	AE77029	AE77140	AE77100
	ESCUTCHEON	F	AE77012-OC				
ROSE (2 REQ'D)		G	S76012				
ASSY, LOCK UNIT		H	A7815				
FACEPLATE		J	S77815				
STRIKE ASSY		K	A8737-1				
STRIKE BOX		L	PE1396				
THUMB TURN		M	AS76319				
DOOR MARKER		N	Q513-068				
INSTRUCTION SHEETS		P	Q513-067				
SCREW PACK		R	*See page 34*				
CYLINDER, CONVENTIONAL		T	*See Cylinder Chart on page 39*				
CYLINDER, SFIC							

MA521 - Entry Lock

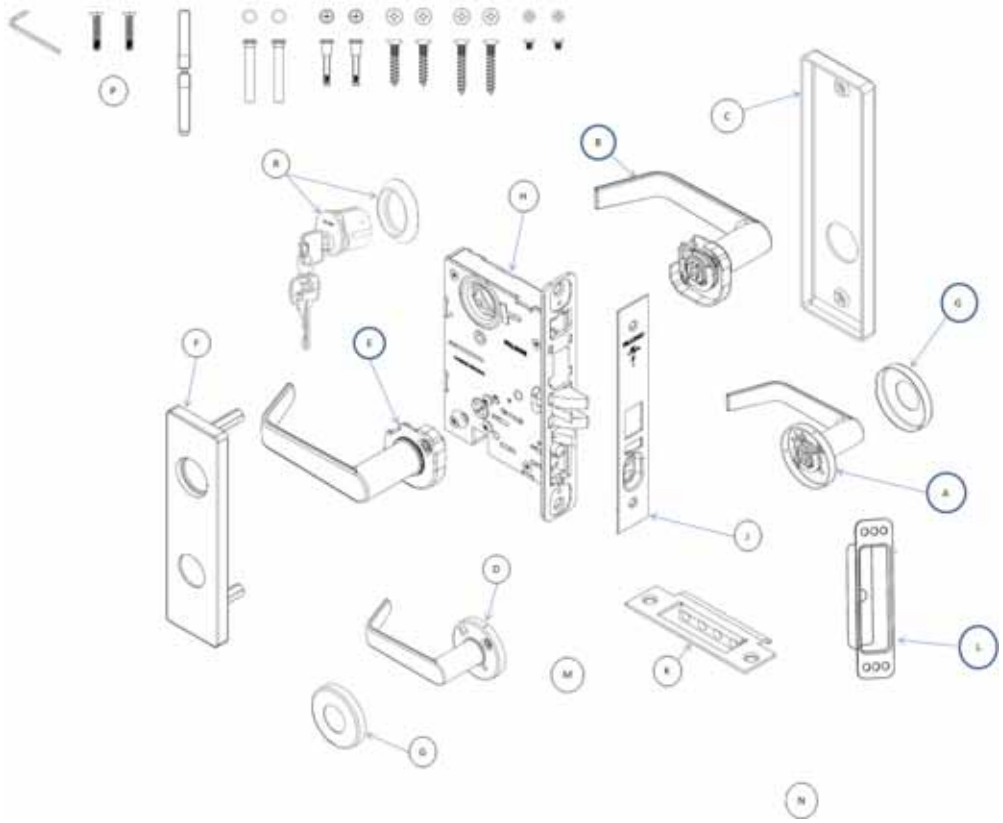

SFIC Not Shown

Description			Trim				
			Lever				Knob
			Dane	Sutro	Avalon	Quantum	Hana
INSIDE TRIM	KNOB/LEVER SECTIONAL	A	AS76280	AS76526	AS76029	AS76140	AS76100
	KNOB/LEVER ESCUTCHEON	B	AE77280	AE77526	AE77029	AE77140	AE77100
	ESCUTCHEON	C	E77012-IP				
OUTSIDE TRIM	KNOB/LEVER SECTIONAL	D	AS76280	AS76526	AS76029	AS76140	AS76100
	KNOB/LEVER ESCUTCHEON	E	AE77280	AE77526	AE77029	AE77140	AE77100
	ESCUTCHEON	F	AE77012-OC				
ROSE (2 REQ'D)		G	S76012				
ASSY, LOCK UNIT		H	A7804				
FACEPLATE		J	S77804				
STRIKE ASSY		K	A8737-1				
STRIKE BOX		L	PE1396				
DOOR MARKER		M	Q513-068				
INSTRUCTION SHEETS		N	Q513-067				
SCREW PACK		P	*See page 34*				
CYLINDER, CONVENTIONAL		R	*See Cylinder Chart on page 39*				
CYLINDER, SFIC							

MA531 - Apartment Corridor Door Lock

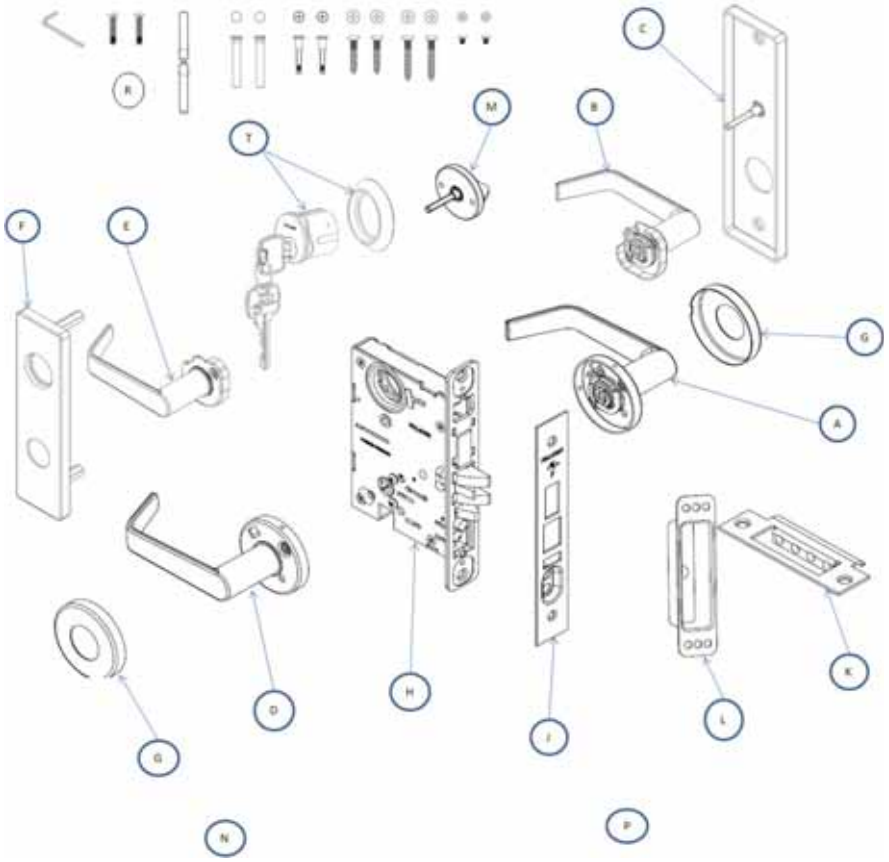

SFIC Not Shown

Description			Trim				
			Lever				Knob
			Dane	Sutro	Avalon	Quantum	Hana
INSIDE TRIM	KNOB/LEVER SECTIONAL	A	AS76280	AS76526	AS76029	AS76140	AS76100
	KNOB/LEVER ESCUTCHEON	B	AE77280	AE77526	AE77029	AE77140	AE77100
	ESCUTCHEON	C	AE77012-IT				
OUTSIDE TRIM	KNOB/LEVER SECTIONAL	D	AS76280	AS76526	AS76029	AS76140	AS76100
	KNOB/LEVER ESCUTCHEON	E	AE77280	AE77526	AE77029	AE77140	AE77100
	ESCUTCHEON	F	AE77012-OC				
ROSE (2 REQ'D)		G	S76012				
ASSY, LOCK UNIT		H	A7820				
FACEPLATE		J	S77820				
STRIKE ASSY		K	A8737-1				
STRIKE BOX		L	PE1396				
THUMB TURN		M	AS76319				
DOOR MARKER		N	Q513-068				
INSTRUCTION SHEETS		P	Q513-067				
SCREW PACK		R	*See page 34*				
CYLINDER, CONVENTIONAL		T	*See Cylinder Chart on page 39*				
CYLINDER, SFIC							

MA541 - Entry/Office Lock

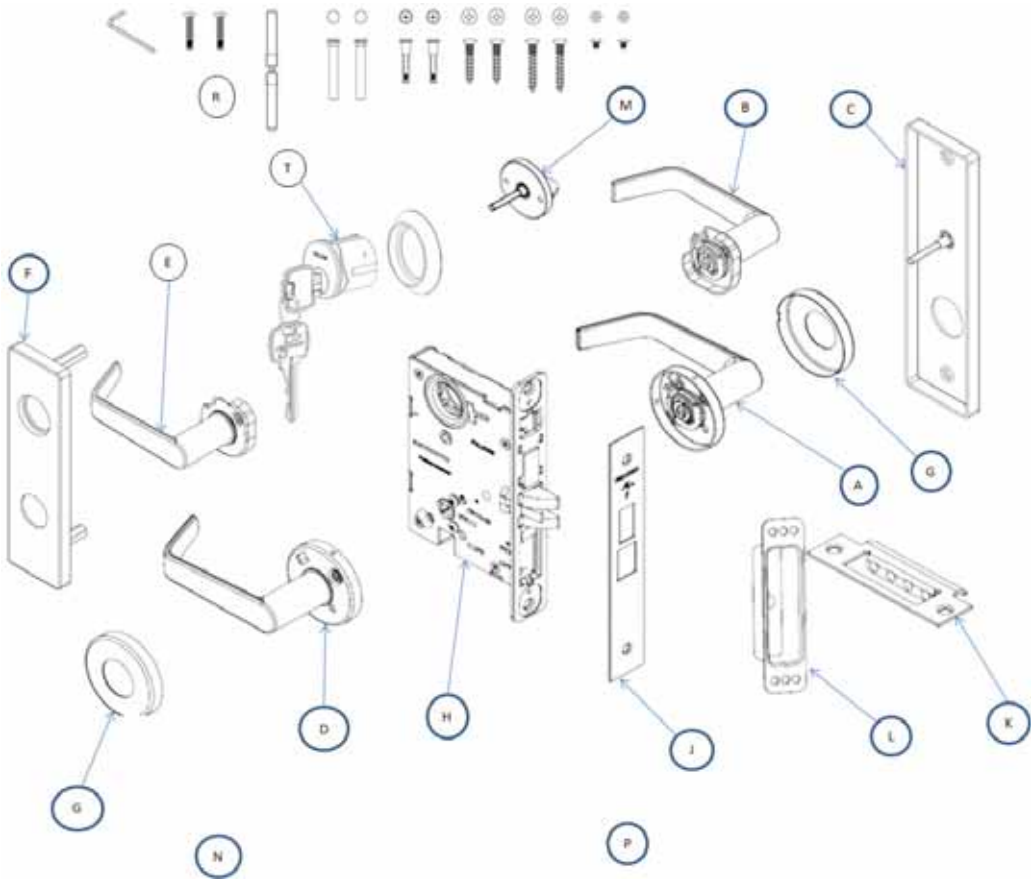

SFIC Not Shown

Description			Trim				
			Lever				Knob
			Dane	Sutro	Avalon	Quantum	Hana
INSIDE TRIM	KNOB/LEVER SECTIONAL	A	AS76280	AS76526	AS76029	AS76140	AS76100
	KNOB/LEVER ESCUTCHEON	B	AE77280	AE77526	AE77029	AE77140	AE77100
	ESCUTCHEON	C	AE77012-IT				
OUTSIDE TRIM	KNOB/LEVER SECTIONAL	D	AS76280	AS76526	AS76029	AS76140	AS76100
	KNOB/LEVER ESCUTCHEON	E	AE77280	AE77526	AE77029	AE77140	AE77100
	ESCUTCHEON	F	AE77012-OC				
ROSE (2 REQ'D)		G	S76012				
ASSY, LOCK UNIT		H	A7821				
FACEPLATE		J	S77819				
STRIKE ASSY		K	A8737-1				
STRIKE BOX		L	PE1396				
THUMB TURN		M	AS76319				
DOOR MARKER		N	Q513-068				
INSTRUCTION SHEETS		P	Q513-067				
SCREW PACK		R	*See page 34*				
CYLINDER, CONVENTIONAL		T	*See Cylinder Chart on page 39*				
CYLINDER, SFIC							

MA551 - Holdback Lock

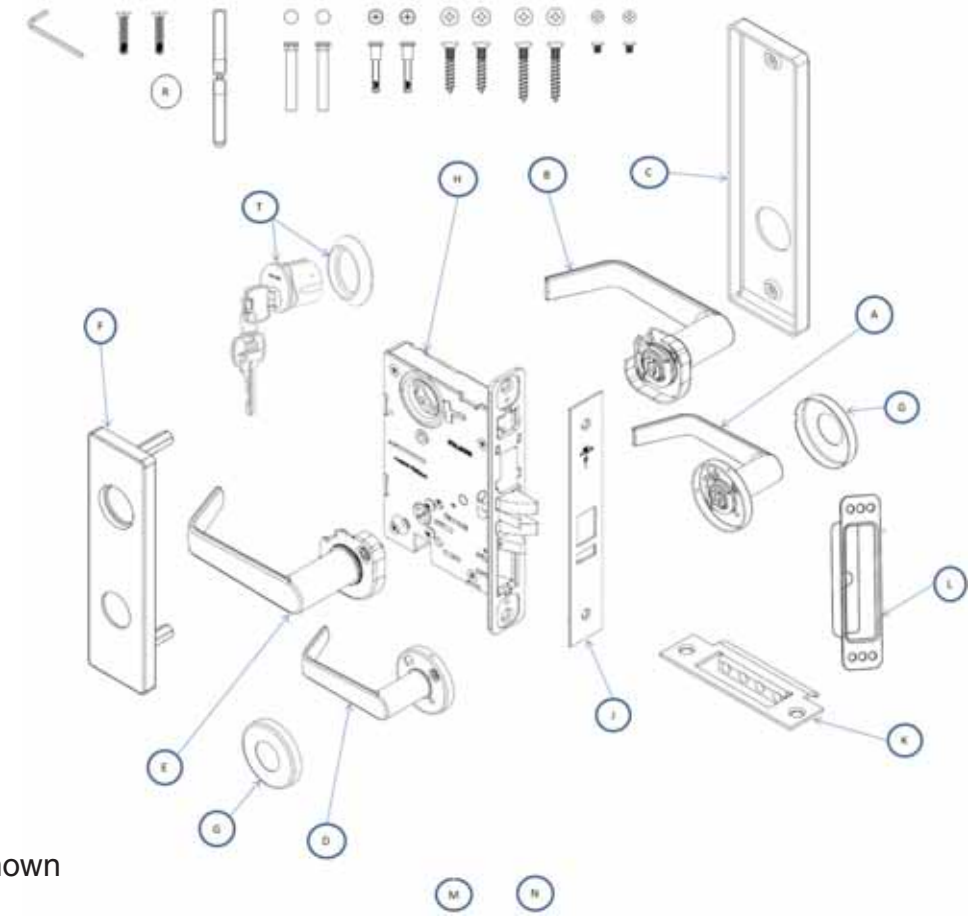

SFIC Not Shown

Description			Trim				
			Lever				Knob
			Dane	Sutro	Avalon	Quantum	Hana
INSIDE TRIM	KNOB/LEVER SECTIONAL	A	AS76280	AS76526	AS76029	AS76140	AS76100
	KNOB/LEVER ESCUTCHEON	B	AE77280	AE77526	AE77029	AE77140	AE77100
	ESCUTCHEON	C	E77012-IP				
OUTSIDE TRIM	KNOB/LEVER SECTIONAL	D	AS76280	AS76526	AS76029	AS76140	AS76100
	KNOB/LEVER ESCUTCHEON	E	AE77280	AE77526	AE77029	AE77140	AE77100
	ESCUTCHEON	F	AE77012-OC				
ROSE (2 REQ'D)		G	S76012				
ASSY, LOCK UNIT		H	A7806				
FACEPLATE		J	S77805-LL				
STRIKE ASSY		K	A8737-1				
STRIKE BOX		L	PE1396				
DOOR MARKER		M	Q513-068				
INSTRUCTION SHEETS		N	Q513-067				
SCREW PACK		R	*See page 34*				
CYLINDER, CONVENTIONAL		T	*See Cylinder Chart on page 39*				
CYLINDER, SFIC							

MA561 - Classroom Lock

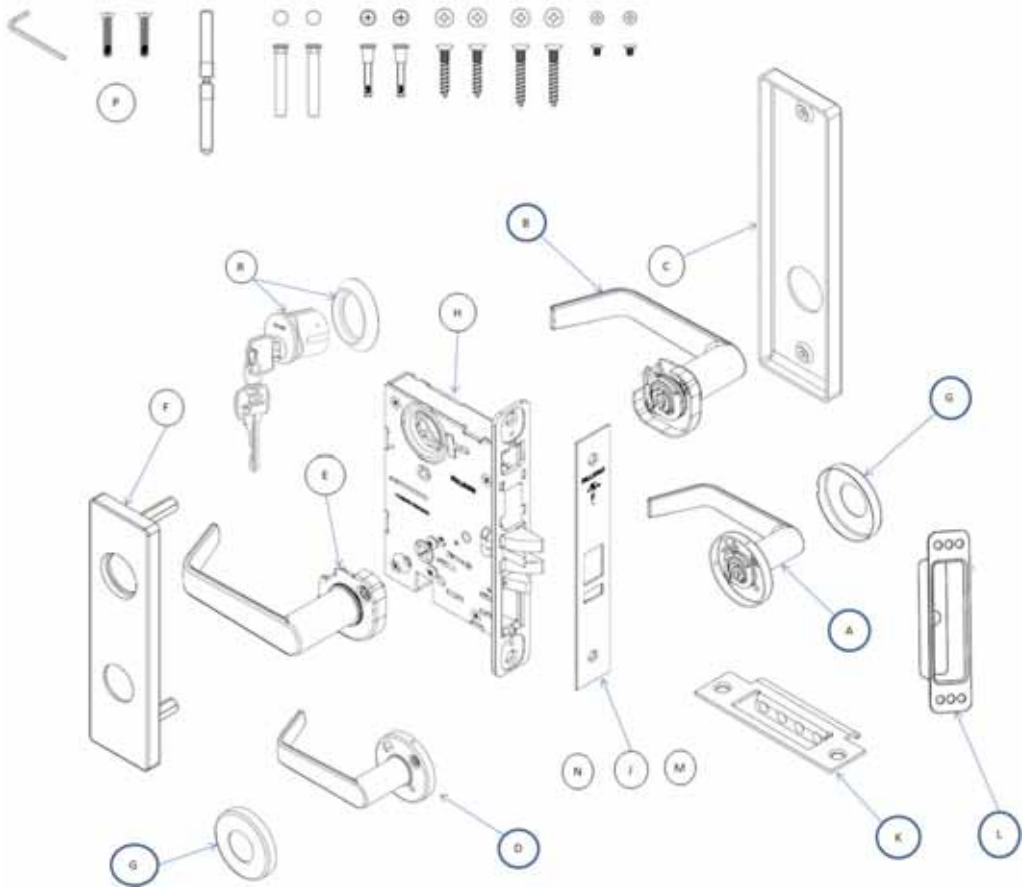

SFIC Not Shown

Description			Trim				
			Lever				Knob
			Dane	Sutro	Avalon	Quantum	Hana
INSIDE TRIM	KNOB/LEVER SECTIONAL	A	AS76280	AS76526	AS76029	AS76140	AS76100
	KNOB/LEVER ESCUTCHEON	B	AE77280	AE77526	AE77029	AE77140	AE77100
	ESCUTCHEON	C	E77012-IP				
OUTSIDE TRIM	KNOB/LEVER SECTIONAL	D	AS76280	AS76526	AS76029	AS76140	AS76100
	KNOB/LEVER ESCUTCHEON	E	AE77280	AE77526	AE77029	AE77140	AE77100
	ESCUTCHEON	F	AE77012-OC				
ROSE (2 REQ'D)		G	S76012				
ASSY, LOCK UNIT		H	A7805				
FACEPLATE		J	S77805				
STRIKE ASSY		K	A8737-1				
STRIKE BOX		L	PE1396				
DOOR MARKER		M	Q513-068				
INSTRUCTION SHEETS		N	Q513-067				
SCREW PACK		P	*See page 34*				
CYLINDER, CONVENTIONAL		R	*See Cylinder Chart on page 39*				
CYLINDER, SFIC							

MA571 - Dormitory or Exit Lock

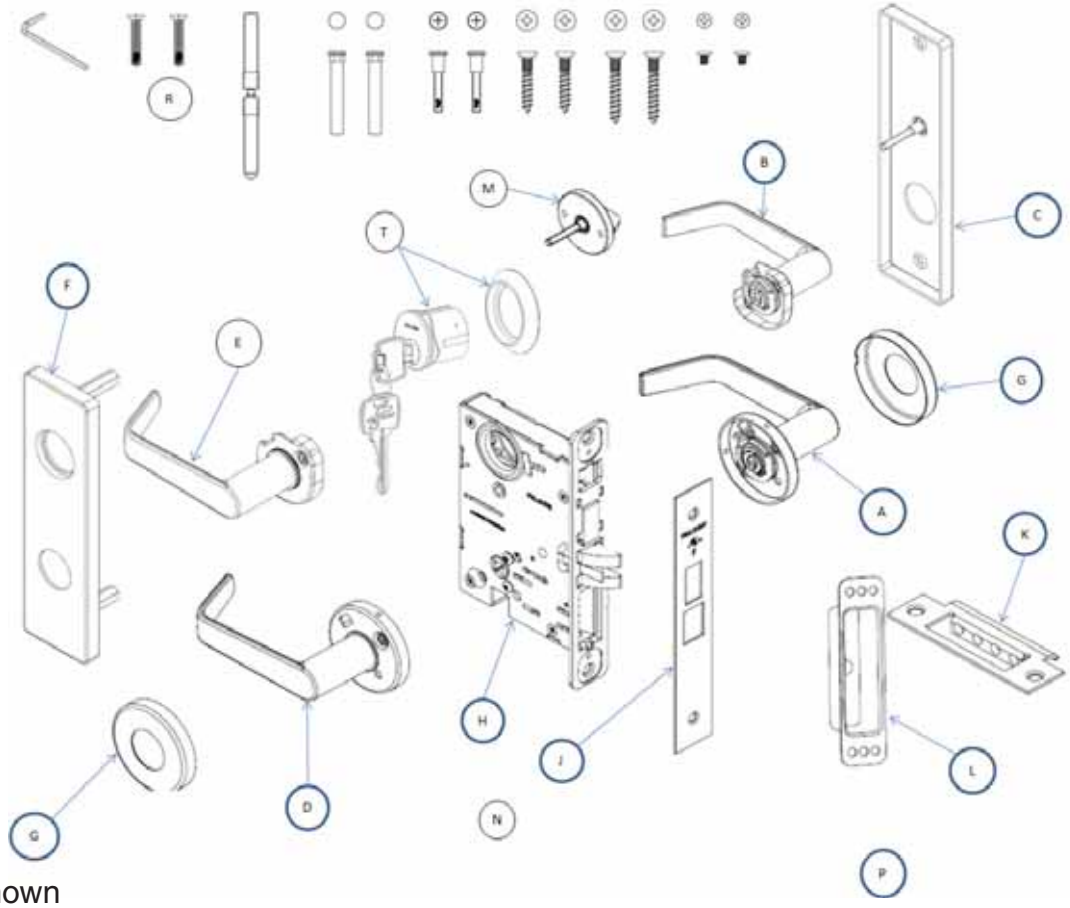

SFIC Not Shown

Description			Trim				
			Lever				Knob
			Dane	Sutro	Avalon	Quantum	Hana
INSIDE TRIM	KNOB/LEVER SECTIONAL	A	AS76280	AS76526	AS76029	AS76140	AS76100
	KNOB/LEVER ESCUTCHEON	B	AE77280	AE77526	AE77029	AE77140	AE77100
	ESCUTCHEON	C	AE77012-IT				
OUTSIDE TRIM	KNOB/LEVER SECTIONAL	D	AS76280	AS76526	AS76029	AS76140	AS76100
	KNOB/LEVER ESCUTCHEON	E	AE77280	AE77526	AE77029	AE77140	AE77100
	ESCUTCHEON	F	AE77012-OC				
ROSE (2 REQ'D)		G	S76012				
ASSY, LOCK UNIT		H	A7813				
FACEPLATE		J	S77819				
STRIKE ASSY		K	A8737-1				
STRIKE BOX		L	PE1396				
THUMB TURN		M	AS76319				
DOOR MARKER		N	Q513-068				
INSTRUCTION SHEETS		P	Q513-067				
SCREW PACK		R	*See page 34*				
CYLINDER, CONVENTIONAL		T	*See Cylinder Chart on page 39*				
CYLINDER, SFIC							

MA581 - Storeroom / Closet Lock

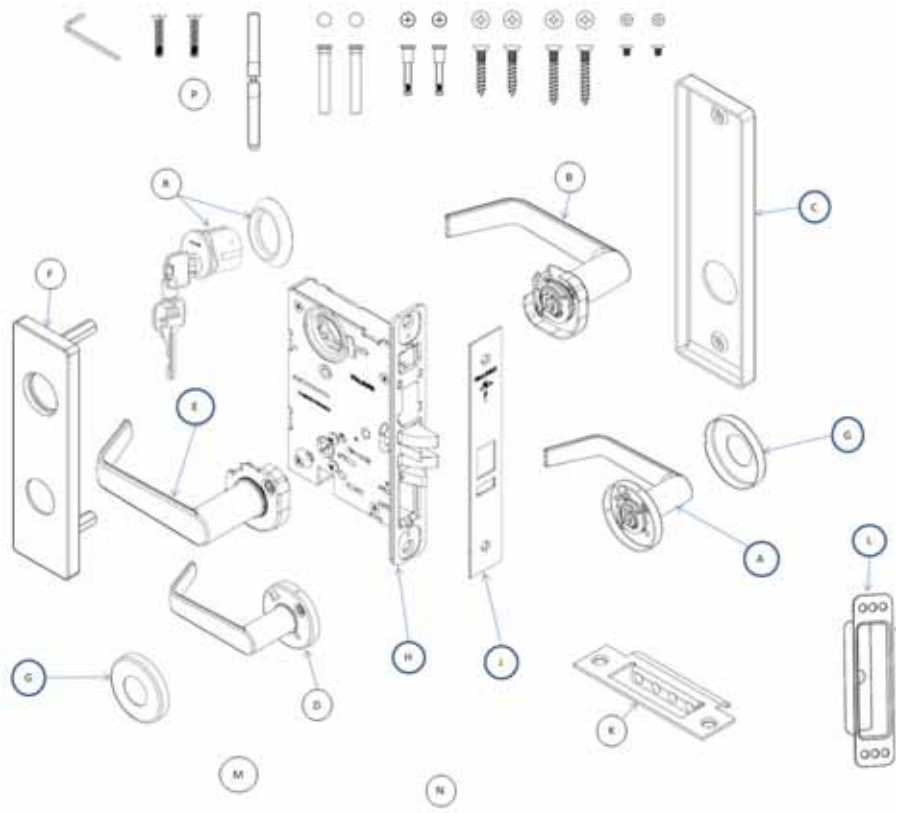

SFIC Not Shown

Description			Trim				
			Lever				Knob
			Dane	Sutro	Avalon	Quantum	Hana
INSIDE TRIM	KNOB/LEVER SECTIONAL	A	AS76280	AS76526	AS76029	AS76140	AS76100
	KNOB/LEVER ESCUTCHEON	B	AE77280	AE77526	AE77029	AE77140	AE77100
	ESCUTCHEON	C	E77012-IP				
OUTSIDE TRIM	KNOB/LEVER SECTIONAL	D	AS76280	AS76526	AS76029	AS76140	AS76100
	KNOB/LEVER ESCUTCHEON	E	AE77280	AE77526	AE77029	AE77140	AE77100
	ESCUTCHEON	F	AE77012-OC				
ROSE (2 REQ'D)		G	S76012				
ASSY, LOCK UNIT		H	A7807				
FACEPLATE		J	S77805				
STRIKE ASSY		K	A8737-1				
STRIKE BOX		L	PE1396				
DOOR MARKER		M	Q513-068				
INSTRUCTION SHEETS		N	Q513-067				
SCREW PACK		P	*See page 34*				
CYLINDER, CONVENTIONAL		R	*See Cylinder Chart on page 39*				
CYLINDER, SFIC							

MA621 - Front Door / Apartment Corridor

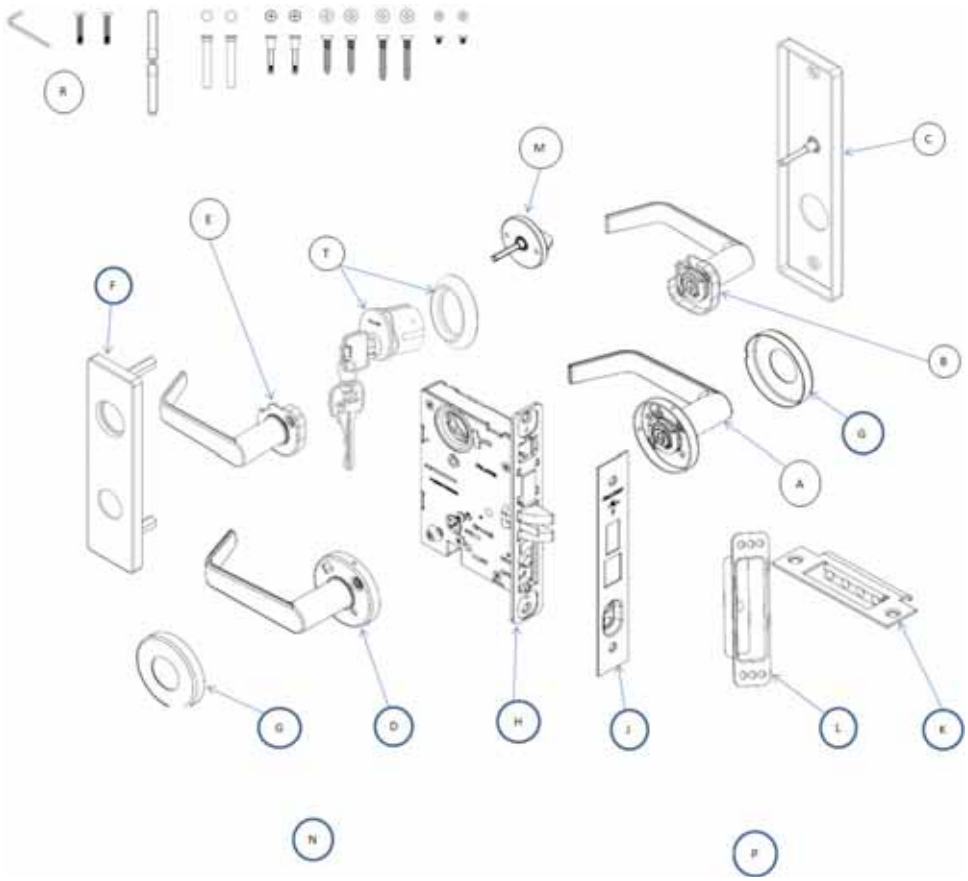

SFIC Not Shown

Description			Trim				
			Lever				Knob
			Dane	Sutro	Avalon	Quantum	Hana
INSIDE TRIM	KNOB/LEVER SECTIONAL	A	AS76280	AS76526	AS76029	AS76140	AS76100
	KNOB/LEVER ESCUTCHEON	B	AE77280	AE77526	AE77029	AE77140	AE77100
	ESCUTCHEON	C	AE77012-IT				
OUTSIDE TRIM	KNOB/LEVER SECTIONAL	D	AS76280	AS76526	AS76029	AS76140	AS76100
	KNOB/LEVER ESCUTCHEON	E	AE77280	AE77526	AE77029	AE77140	AE77100
	ESCUTCHEON	F	AE77012-OC				
ROSE (2 REQ'D)		G	S76012				
ASSY, LOCK UNIT		H	A7808				
FACEPLATE		J	S77811				
STRIKE ASSY		K	A8737-1				
STRIKE BOX		L	PE1396				
THUMB TURN		M	AS76319				
DOOR MARKER		N	Q513-068				
INSTRUCTION SHEETS		P	Q513-067				
SCREW PACK		R	*See page 34*				
CYLINDER, CONVENTIONAL		T	*See Cylinder Chart on page 39*				
CYLINDER, SFIC							

MA641 - Dormitory Lock

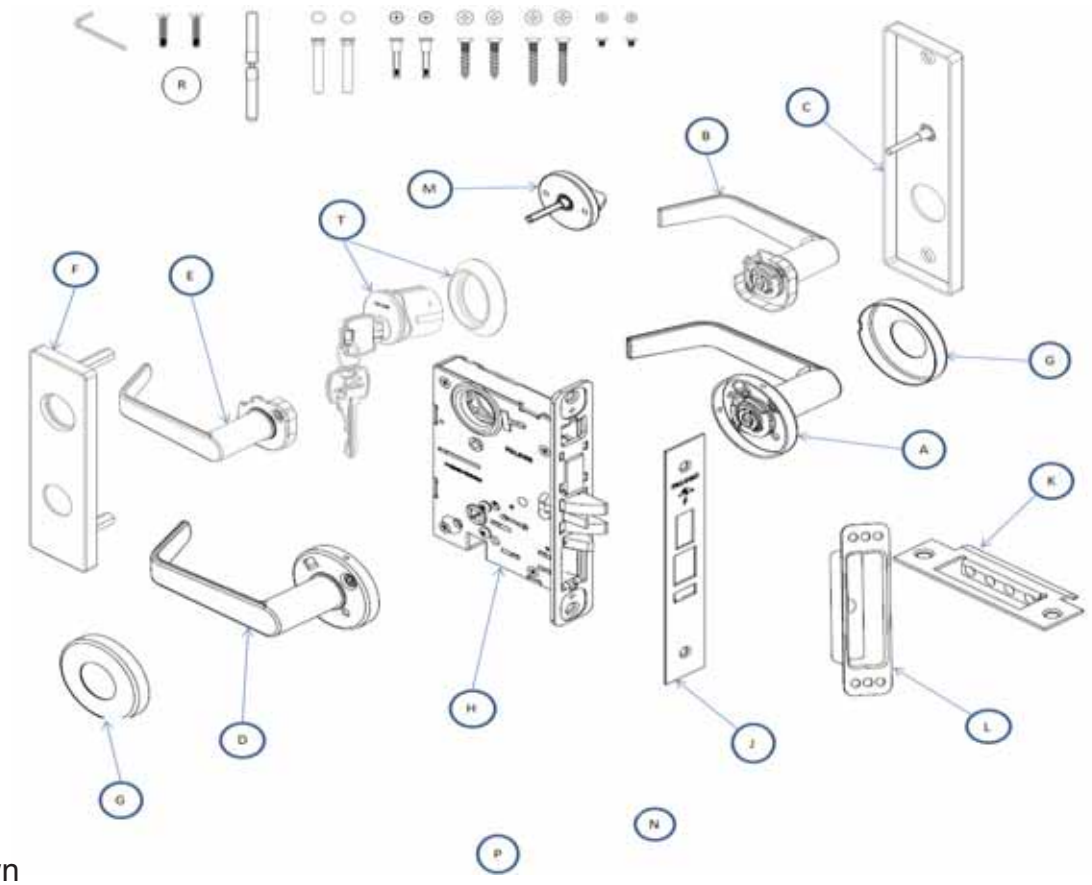

SFIC Not Shown

Description			Trim				
			Lever				Knob
			Dane	Sutro	Avalon	Quantum	Hana
INSIDE TRIM	KNOB/LEVER SECTIONAL	A	AS76280	AS76526	AS76029	AS76140	AS76100
	KNOB/LEVER ESCUTCHEON	B	AE77280	AE77526	AE77029	AE77140	AE77100
	ESCUTCHEON	C	AE77012-IT				
OUTSIDE TRIM	KNOB/LEVER SECTIONAL	D	AS76280	AS76526	AS76029	AS76140	AS76100
	KNOB/LEVER ESCUTCHEON	E	AE77280	AE77526	AE77029	AE77140	AE77100
	ESCUTCHEON	F	AE77012-OC				
ROSE (2 REQ'D)		G	S76012				
ASSY, LOCK UNIT		H	A7815				
FACEPLATE		J	S77815				
STRIKE ASSY		K	A8737-1				
STRIKE BOX		L	PE1396				
THUMB TURN		M	AS76319				
DOOR MARKER		N	Q513-068				
INSTRUCTION SHEETS		P	Q513-067				
SCREW PACK		R	*See page 34*				
CYLINDER, CONVENTIONAL		T	*See Cylinder Chart on page 39*				
CYLINDER, SFIC							

MA851 - Electrified EL - 12 & 24 VDC (Fail Safe)

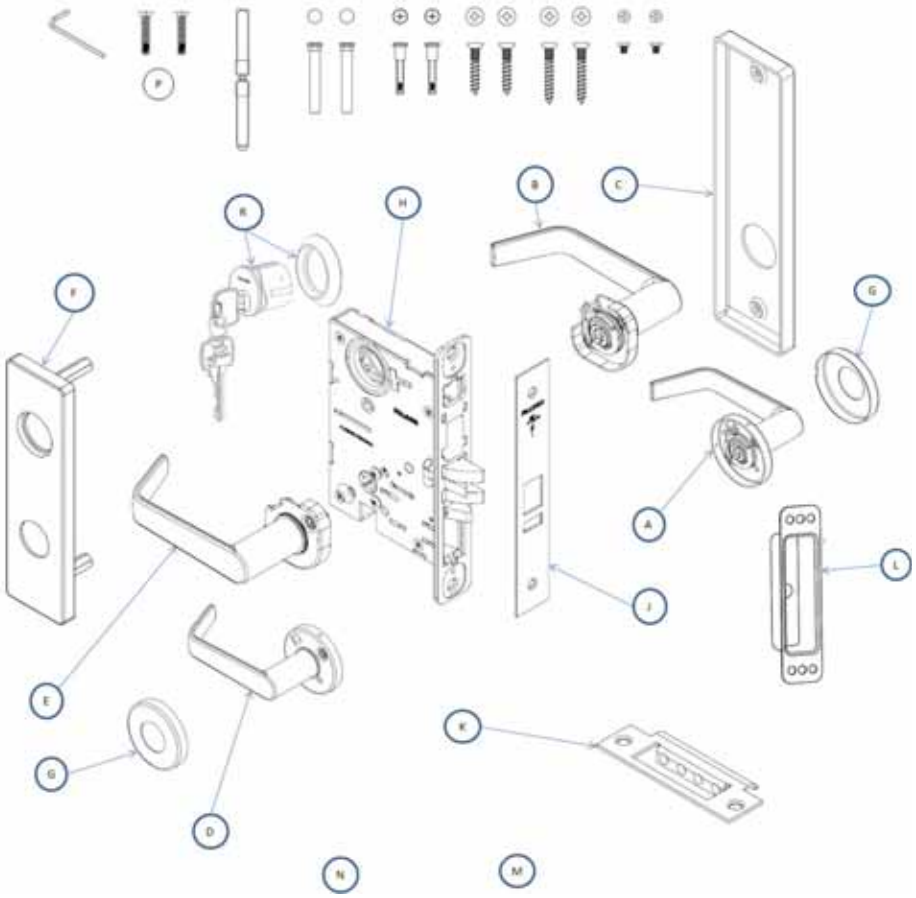

SFIC Not Shown

Description			Trim				
			Lever				Knob
			Dane	Sutro	Avalon	Quantum	Hana
INSIDE TRIM	KNOB/LEVER SECTIONAL	A	AS76280	AS76526	AS76029	AS76140	AS76100
	KNOB/LEVER ESCUTCHEON	B	AE77280	AE77526	AE77029	AE77140	AE77100
	ESCUTCHEON	C	E77012-IP				
OUTSIDE TRIM	KNOB/LEVER SECTIONAL	D	AS76280	AS76526	AS76029	AS76140	AS76100
	KNOB/LEVER ESCUTCHEON	E	AE77280	AE77526	AE77029	AE77140	AE77100
	ESCUTCHEON	F	AE77012-OC				
ROSE (2 REQ'D)		G	S76012				
ASSY, LOCK UNIT		H	A7851				
FACEPLATE		J	S77805				
STRIKE ASSY		K	A8737-1				
STRIKE BOX		L	PE1396				
DOOR MARKER		M	Q513-068				
INSTRUCTION SHEETS		N	Q513-067				
SCREW PACK		P	*See page 34*				
CYLINDER, CONVENTIONAL		R	*See Cylinder Chart on page 39*				
CYLINDER, SFIC							

MA881 - Electrified EU - 12 & 24 VDC (Fail Secure)

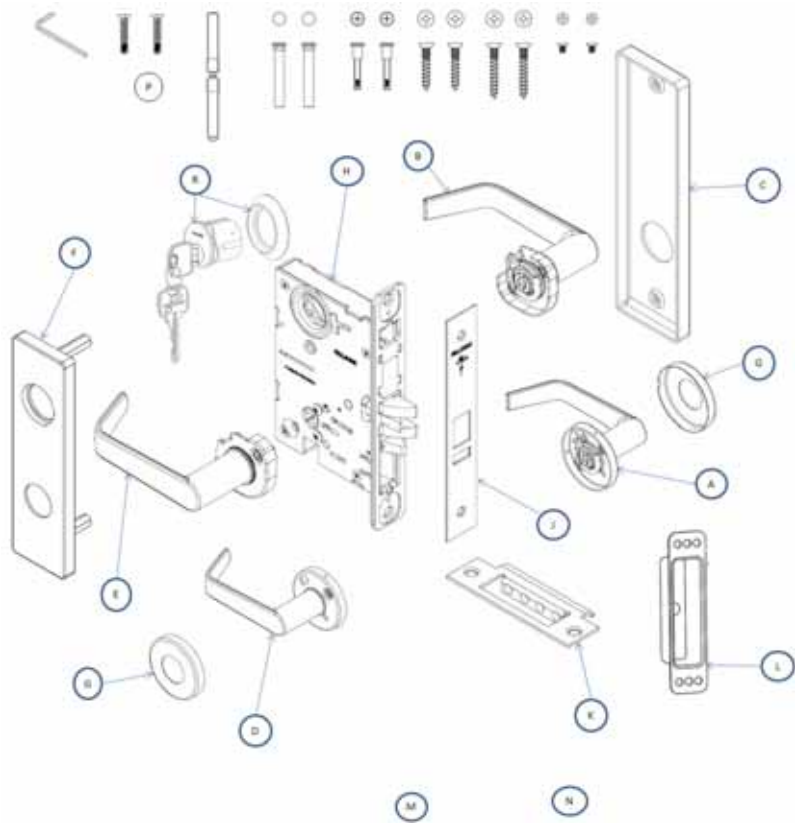

SFIC Not Shown

Description			Trim				
			Lever				Knob
			Dane	Sutro	Avalon	Quantum	Hana
INSIDE TRIM	KNOB/LEVER SECTIONAL	A	AS76280	AS76526	AS76029	AS76140	AS76100
	KNOB/LEVER ESCUTCHEON	B	AE77280	AE77526	AE77029	AE77140	AE77100
	ESCUTCHEON	C	E77012-IP				
OUTSIDE TRIM	KNOB/LEVER SECTIONAL	D	AS76280	AS76526	AS76029	AS76140	AS76100
	KNOB/LEVER ESCUTCHEON	E	AE77280	AE77526	AE77029	AE77140	AE77100
	ESCUTCHEON	F	AE77012-OC				
ROSE (2 REQ'D)		G	S76012				
ASSY, LOCK UNIT		H	A7881				
FACEPLATE		J	S77805				
STRIKE ASSY		K	A8737-1				
STRIKE BOX		L	PE1396				
DOOR MARKER		M	Q513-068				
INSTRUCTION SHEETS		N	Q513-067				
SCREW PACK		P	*See page 34*				
CYLINDER, CONVENTIONAL		R	*See Cylinder Chart on page 39*				
CYLINDER, SFIC							

MA911 - Classroom Dead Lock

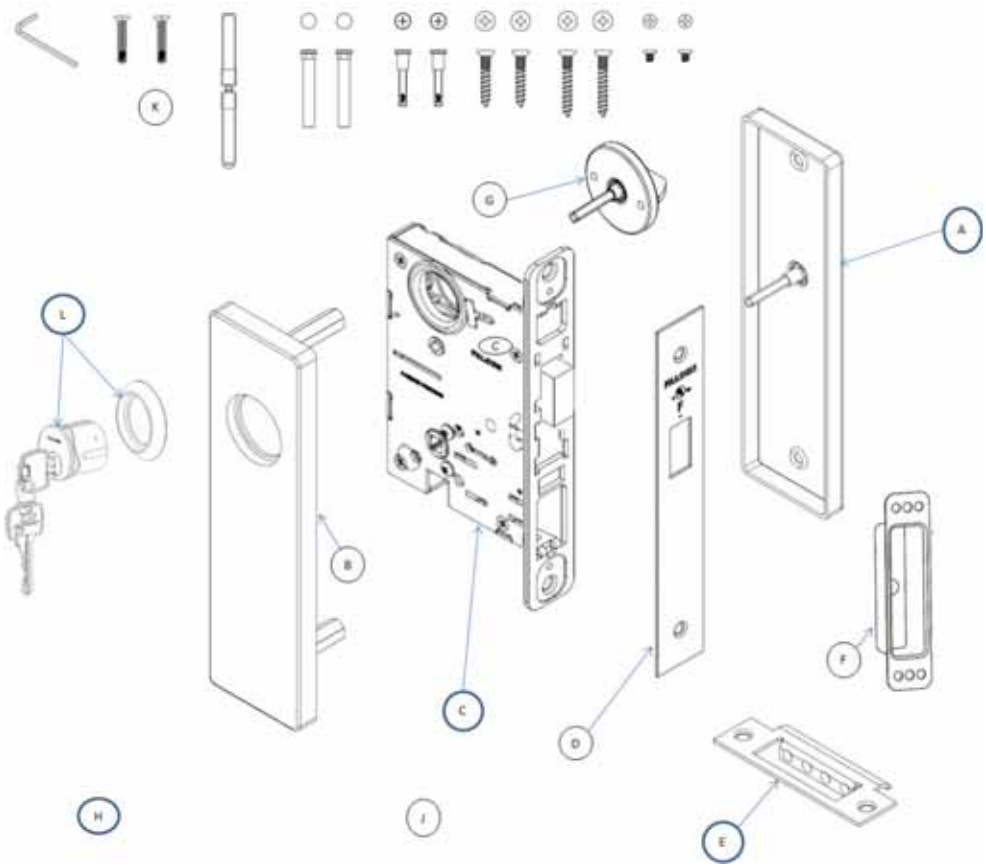

SFIC Not Shown

Description			Trim				
			Lever				Knob
			Dane	Sutro	Avalon	Quantum	Hana
INSIDE TRIM	KNOB/LEVER SECTIONAL	-	N/R	N/R	N/R	N/R	N/R
	KNOB/LEVER ESCUTCHEON	-	N/R	N/R	N/R	N/R	N/R
	ESCUTCHEON	A	AE77012-IE				
OUTSIDE TRIM	KNOB/LEVER SECTIONAL	-	N/R	N/R	N/R	N/R	N/R
	KNOB/LEVER ESCUTCHEON	-	N/R	N/R	N/R	N/R	N/R
	ESCUTCHEON	B	AE77012-OK				
ASSY, LOCK UNIT		C	A7829				
FACEPLATE		D	S77816				
STRIKE ASSY		E	A8737-1				
STRIKE BOX		F	PE1396				
THUMB TURN		G	AS76319				
DOOR MARKER		H	Q513-068				
INSTRUCTION SHEETS		J	Q513-067				
SCREW PACK		K	*See page 34*				
CYLINDER, CONVENTIONAL		L	*See Cylinder Chart on page 39*				
CYLINDER, SFIC							

MA921 - Dead Lock

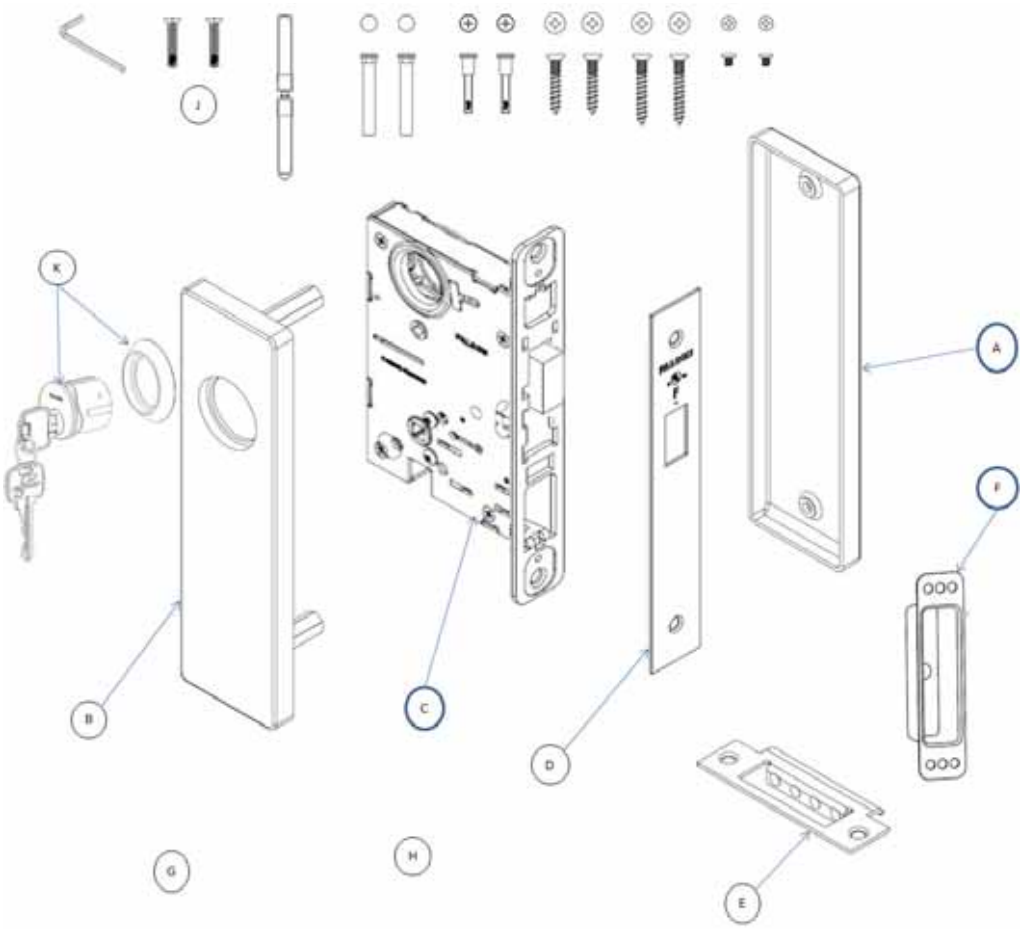

Description			Trim				
			Lever				Knob
			Dane	Sutro	Avalon	Quantum	Hana
INSIDE TRIM	KNOB/LEVER SECTIONAL	-	N/R	N/R	N/R	N/R	N/R
	KNOB/LEVER ESCUTCHEON	-	N/R	N/R	N/R	N/R	N/R
	ESCUTCHEON	A	E77012-IB				
OUTSIDE TRIM	KNOB/LEVER SECTIONAL	-	N/R	N/R	N/R	N/R	N/R
	KNOB/LEVER ESCUTCHEON	-	N/R	N/R	N/R	N/R	N/R
	ESCUTCHEON	B	AE77012-OK				
ASSY, LOCK UNIT		C	A7816				
FACEPLATE		D	S77816				
STRIKE ASSY		E	A8737-1				
STRIKE BOX		F	PE1396				
DOOR MARKER		G	Q513-068				
INSTRUCTION SHEETS		H	Q513-067				
SCREW PACK		J	*See page 34*				
CYLINDER, CONVENTIONAL		K	*See Cylinder Chart on page 39*				
CYLINDER, SFIC							

MA931 - Dead Lock

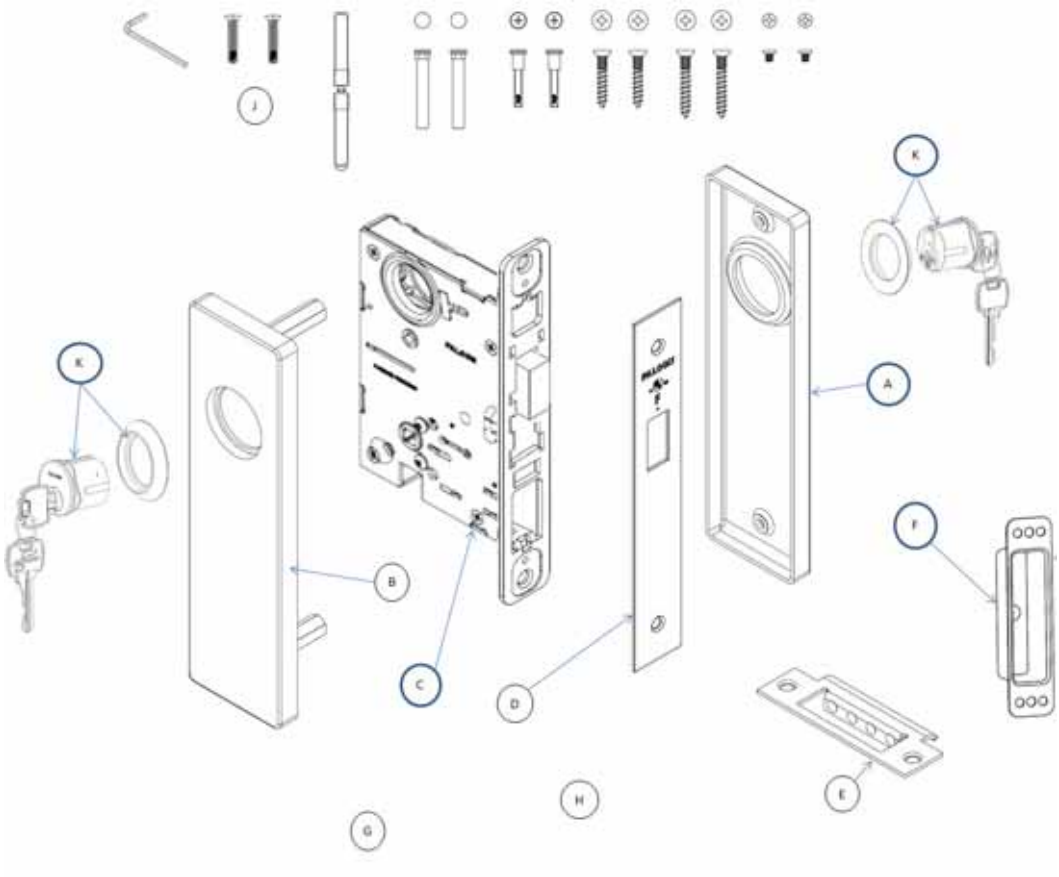

SFIC Not Shown

Description			Trim				
			Lever				Knob
			Dane	Sutro	Avalon	Quantum	Hana
INSIDE TRIM	KNOB/LEVER SECTIONAL	-	N/R	N/R	N/R	N/R	N/R
	KNOB/LEVER ESCUTCHEON	-	N/R	N/R	N/R	N/R	N/R
	ESCUTCHEON	A	E77012-IK				
OUTSIDE TRIM	KNOB/LEVER SECTIONAL	-	N/R	N/R	N/R	N/R	N/R
	KNOB/LEVER ESCUTCHEON	-	N/R	N/R	N/R	N/R	N/R
	ESCUTCHEON	B	AE77012-OK				
ASSY, LOCK UNIT		C	A7816				
FACEPLATE		D	S77816				
STRIKE ASSY		E	A8737-1				
STRIKE BOX		F	PE1396				
DOOR MARKER		G	Q513-068				
INSTRUCTION SHEETS		H	Q513-067				
SCREW PACK		J	*See page 34*				
CYLINDER, CONVENTIONAL (2 REQ'D)		K	*See Cylinder Chart on page 39*				
CYLINDER, SFIC (2 REQ'D)							

MA941 - Dead Lock

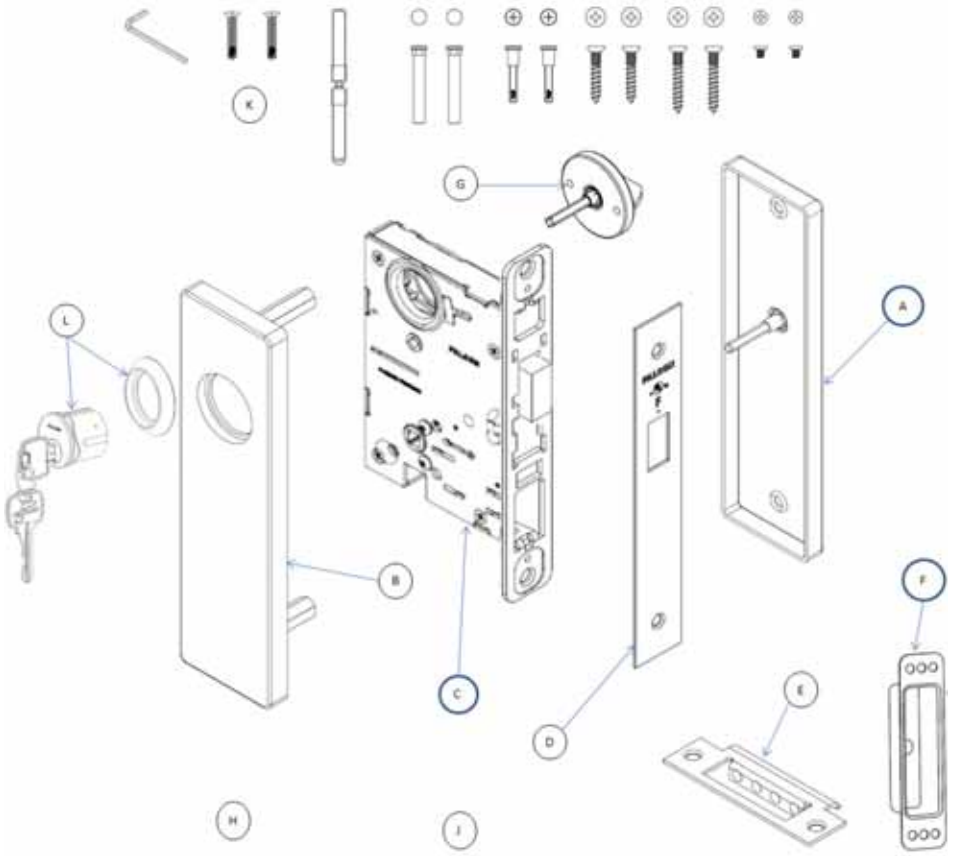

SFIC Not Shown

Description			Trim				
			Lever				Knob
			Dane	Sutro	Avalon	Quantum	Hana
INSIDE TRIM	KNOB/LEVER SECTIONAL	-	N/R	N/R	N/R	N/R	N/R
	KNOB/LEVER ESCUTCHEON	-	N/R	N/R	N/R	N/R	N/R
	ESCUTCHEON	A	AE77012-IE				
OUTSIDE TRIM	KNOB/LEVER SECTIONAL	-	N/R	N/R	N/R	N/R	N/R
	KNOB/LEVER ESCUTCHEON	-	N/R	N/R	N/R	N/R	N/R
	ESCUTCHEON	B	AE77012-OK				
ASSY, LOCK UNIT		C	A7816				
FACEPLATE		D	S77816				
STRIKE ASSY		E	A8737-1				
STRIKE BOX		F	PE1396				
THUMBTURN		G	AS76319				
DOOR MARKER		H	Q513-068				
INSTRUCTION SHEETS		J	Q513-067				
SCREW PACK		K	*See page 34*				
CYLINDER, CONVENTIONAL (2 REQ'D)		L	*See Cylinder Chart on page 39*				
CYLINDER, SFIC (2 REQ'D)							

MA12 - Single Dummy

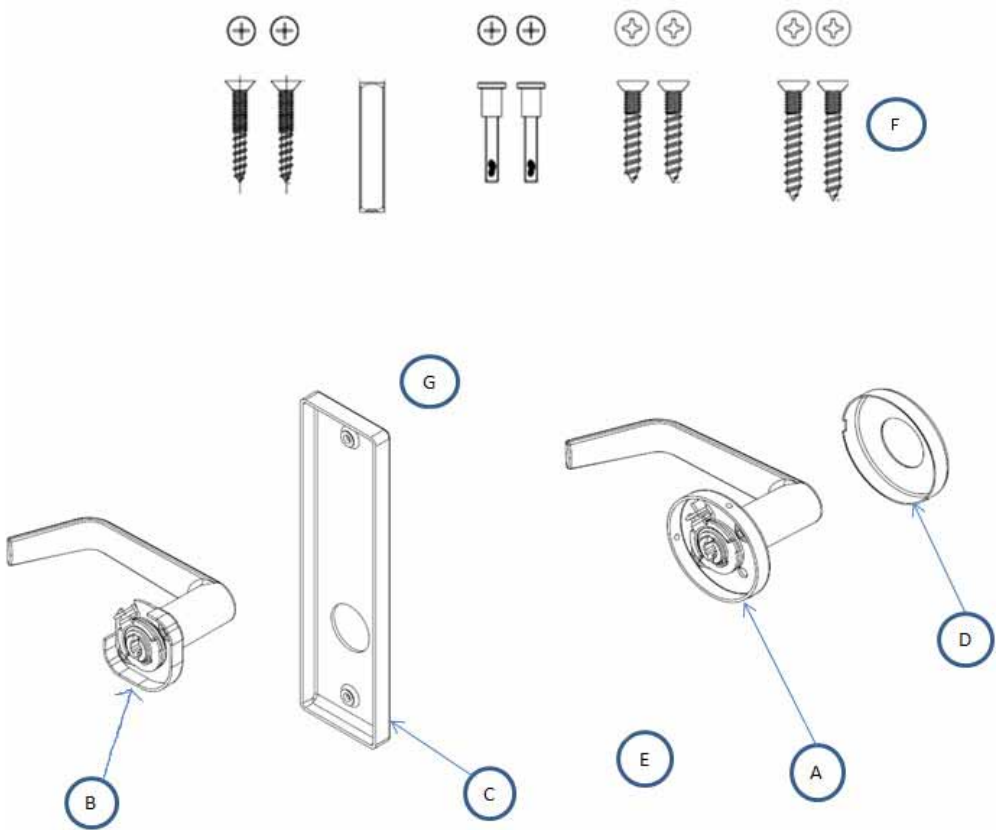

Knob/Lever on One Side Fixed			Trim				
			Lever				Knob
Description			Dane	Sutro	Avalon	Quantum	Hana
TRIM	KNOB/LEVER SECTIONAL	A	AS76280-D	AS76526-D	AS76029-D	AS76140-D	AS76100-D
	KNOB/LEVER ESCUTCHEON	B	AE77280-D	AE77526-D	AE77029-D	AE77140-D	AE77100-D
	ESCUTCHEON	C	E77012-IP				
ROSE		D	S76012				
DOOR MARKER		E	Q513-068				
SCREW PACK		F	E77331				
TORX SCREW PACK (OPTIONAL)			E77308				
INSTRUCTION SHEET		G	Q513-067				

MA18 - Double Dummy

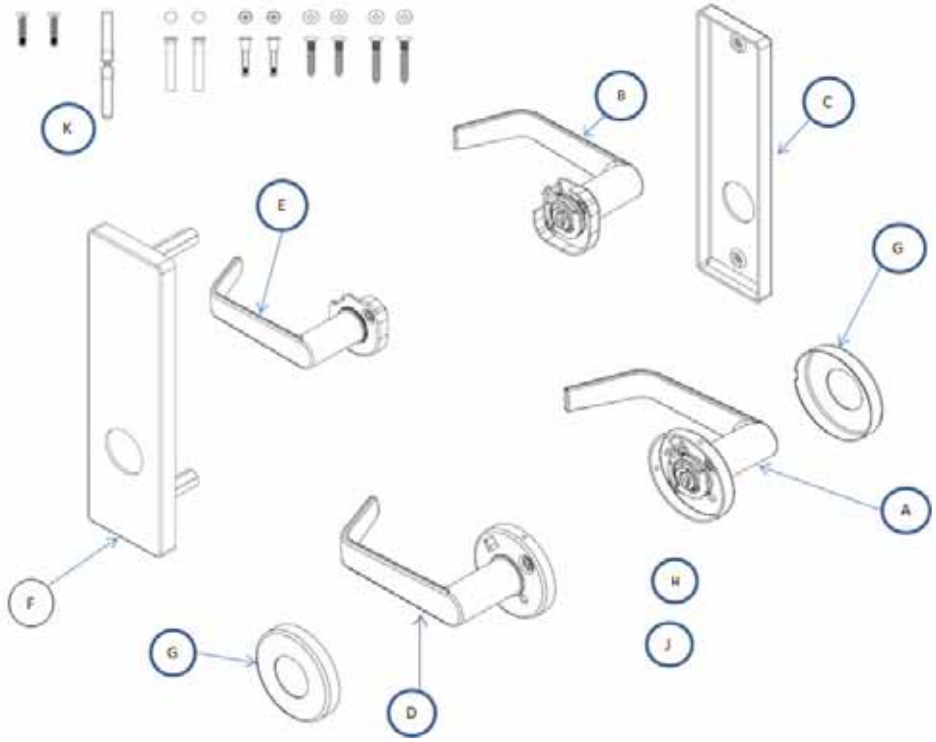

Knob/Lever on Both Sides Fixed			Trim				
			Lever				Knob
Description			Dane	Sutro	Avalon	Quantum	Hana
INSIDE TRIM	KNOB/LEVER SECTIONAL	A	AS76280-D	AS76526-D	AS76029-D	AS76140-D	AS76100-D
	KNOB/LEVER ESCUTCHEON	B	AE77280-D	AE77526-D	AE77029-D	AE77140-D	AE77100-D
	ESCUTCHEON	C	E77012-IP				
OUTSIDE TRIM	KNOB/LEVER SECTIONAL	D	AS76280-D	AS76526-D	AS76029-D	AS76140-D	AS76100-D
	KNOB/LEVER ESCUTCHEON	E	AE77280-D	AE77526-D	AE77029-D	AE77140-D	AE77100-D
	ESCUTCHEON	F	AE77012-0P				
ROSE (2 REQ'D)		G	S76012				
DOOR MARKER		H	Q513-068				
INSTRUCTION SHEETS		J	Q513-067				
SCREW PACK		K	*See page 34*				

Levers

Gala

AG (Avalon-Gala)

DG (Dane-Gala)

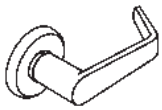

QG (Quantum-Gala)

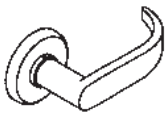

SG (Sutro-Gala)

Napa

AN (Avalon-Napa)

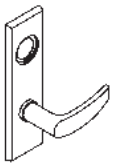

DN (Dane-Napa)

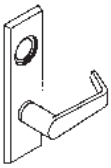

QN (Quantum-Napa)

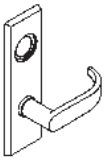

SN (Sutro-Napa)

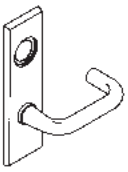

Knobs

HG (Hana-Gala)

HN (Hana-Napa)

MA-Series Screw Packs

Part Number	Description	Use	Specify Finish
S76300	#8-32 x ¼” L Machine Screw	1⅜”-1⅞” door thickness, sectional trim with levers	•
	#12-12/ #12-24 x 1½” L Wood/machine Combination Screw		
	#12-12/ #12-24 x 1¼” L Wood/machine Combination Screw		
	#8-32 x 1¼” L Mounting Screw		
	ø ¼” x 1 11/16” L Post		
	5/16” x 1 9/16” L x 2 pcs STD Sindle Assembly		
	3/32” Allen Wrench		
S76301	#8-32 x ¼” L Machine Screw	Over 1⅞”-2½” door thickness, sectional trim with levers	•
	#12-12/ #12-24 x 1½” L Wood/machine Combination Screw		
	#12-12/ #12-24 x 1¼” L Wood/machine Combination Screw		
	#8-32 x 1½” L Mounting Screw		
	ø ¼” x 2¼” L Post		
	5/16” x 1⅞” L x 2 pcs EXT Sindle Assembly		
	3/32” Allen Wrench		
S76302	#8-32 x ¼” L Machine Screw	1⅜”-1⅞” door thickness, sectional trim with knobs	•
	#12-12/ #12-24 x 1½” L Wood/machine Combination Screw		
	#12-12/ #12-24 x 1¼” L Wood/machine Combination Screw		
	#8-32 x 1¼” L Mounting Screw		
	ø ¼” x 1 11/16” L Post		
	5/16” x 1¼” L x 2 pcs STD Sindle Assembly		
	3/32” Allen Wrench		
S76303	#8-32 x ¼” L Machine Screw	Over 1⅞”-2½” door thickness, sectional trim with knobs	•
	#12-12/ #12-24 x 1½” L Wood/machine Combination Screw		
	#12-12/ #12-24 x 1¼” L Wood/machine Combination Screw		
	#8-32 x 1½” L Mounting Screw		
	ø ¼” x 2¼” L Post		
	5/16” x 1 9/16” L x 2 pcs EXT Sindle Assembly		
	3/32” Allen Wrench		
S76306	#8-32 x ¼” L Torx Head Machine Screw	Torx screw pack, sectional trim, no turn	•
	#12-12/ #12-24 x 1½” L Torx Head Wood/machine Combination Screw		
S76307	#8-32 x ¼” L Torx Head Machine Screw	Torx screw pack, sectional trim, with turn	•
	#12-12/ #12-24 x 1½” L Torx Head Wood/machine Combination Screw		
	#6 x ½” Torx Head Sheet Metal Screw		
S76331	#8-32 x ¼” L Machine Screw	Single Dummy Screw Pack	•
	#12-12/ #12-24 x 1½” L Wood/machine Combination Screw		
	#12-12/ #12-24 x 1¼” L Wood/machine Combination Screw		
	#8-32 x 1¼” L Mounting Screw		
	5/16” x 1 9/16” L STD Spindle		
	ø 0.027” Wire, OD; ø 5/16” x 1⅜” L Spring		
	3/32” Allen Wrench		

Part Number	Description	Use	Specify Finish
E77300	#8-32 x ¼” L Machine Screw	1⅜”-1⅞” door thickness, escutcheon trim with levers	•
	#12-12/ #12-24 x 1½” Wood/machine Combination Screw		
	#12-12/ #12-24 x 1¼” L Wood/machine Combination Screw		
	#8-32 x 1¼” L Mounting Screw		
	ø ¼” x 1 11/16” L Post		
	5/16” x 1 9/16” L x 2 pcs STD Sindle Assembly		
	#10-24 x 1¼” Machine Screw		
	3/32” Allen Wrench		
E77301	#8-32 x ¼” L Machine Screw	Over 1⅞”-2½” door thickness, escutcheon trim with levers	•
	#12-12/ #12-24 x 1½” L Wood/machine Combination Screw		
	#12-12/ #12-24 x 1¼” L Wood/machine Combination Screw		
	#8-32 x 1½” L Mounting Screw		
	ø ¼” x 2¼” L Post		
	5/16” x 1⅞” L x 2 pcs EXT Sindle Assembly		
	#10-24 x 2” Machine Screw		
	3/32” Allen Wrench		
E77302	#8-32 x ¼” L Machine Screw	1⅜”-1⅞” door thickness, escutcheon trim with knobs	•
	#12-12/#12-24 x 1½” L Wood/machine Combination Screw		
	#12-12/#12-24 x 1¼” L Wood/machine Combination Screw		
	#8-32 x 1¼” L Mounting Screw		
	ø ¼” x 1 11/16” L Post		
	5/16” x 1¼” L x 2 pcs STD Knob Spindle Assembly		
	#10-24 x 1¼ L Machine Screw		
	3/32” Allen Wrench		
E77303	#8-32 x ¼” L Machine Screw	Over 1⅞”-2½” door thickness, escutcheon trim with knobs	•
	#12-12/#12-24 x 1½” L Wood/machine Combination Screw		
	#12-12/#12-24 x 1¼” L Wood/machine Combination Screw		
	#8-32 x 1½” L Trim Screw		
	ø ¼” x 1 11/16” L Post		
	5/16” x 1 9/16” L x 2 pcs EXT Spindle Assembly		
	#10-24 x 2” L Machine Screw		
	3/32” Allen Wrench		
E77306	#8-32 x ¼” L Torx Head Machine Screw	Torx screw pack, escutcheon trim, standard door thickness*	•
	#12-12/#12-24 x 1½” L Torx Head Wood/machine Combination Screw		
	#10-24 x 1¼ L Torx Head, Machine Screw		
E77307	#8-32 x ¼” L Torx Head Machine Screw	Torx screw pack, escutcheon trim, extended door thickness**	•
	#12-12/#12-24 x 1½” L Torx Head Wood/machine Combination Screw		
	#10-24 x 2” L Torx Head Machine Screw		
E77308	#8-32 x ¼” L Torx Head Machine Screw	Torx screw pack, rose escutcheon connection door	•
	#12-12/#12-24 x 1½” L Torx Head Wood/machine Screw		
	#10-24/#10 x 1¼” L Torx Head Wood/machine Screw		

Part Number	Description	Use	Specify Finish
E77331	#8-32 x ¼" LMachine Screw	Screw pack, escutcheon connecting door	•
	#12-12/#12-24 x 1½" L Wood/machine Combination Screw		
	#12-12/#12-24 x 1¼" L Wood/machine Combination Screw		
	#8-32 x 1¼" L Mounting Screw		
	5⁄16" x 1 9⁄16" L STD Spindle		
	#10-24/#10 x 1¼" L Wood/machine Combination Screw		
	ø 0.027 Wire, ø 5⁄16" O.D. x 1⅜" L Spring		
	3⁄32" Allen Wrench		

* 1⅜"-1⅞" *Thick*
** *Over* 1⅞"-2½" *Thick*
Available in finishes 606, 613, 630
Non torx screw packs contain armor front screws, strike screws, trim screws, mortise screws, spindle, mounting posts
Torx screw packs contain armor front, strike, and trim screws only

Strikes

Strike	Lip Length (x)	Lip
A8737-1	1¼"	Curved Lip
A8737-2	1 7⁄16"	Curved Lip
A8737-3	1 9⁄16"	Curved Lip
A8737-4	1 11⁄16"	Curved Lip
A8737-5	⅞"	Straight Lip

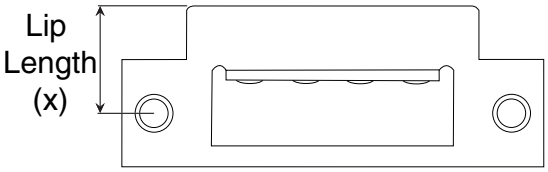

Cams

CAMs for Falcon Cylinders

The Falcon MA Series requires a different CAM for keyed functions than its predecessor, the Falcon M Series. For all keyed functions except the MA381 function, the MA Series uses a single CAM for all standard mortise cylinders and a single CAM for all interchangeable core mortise cylinders. The chart below lists the CAM required.

Door Handing	CAM Part Number	Outside	Inside	For Cylinder
ALL	5622-STD (F1)	MA371, MA411, MA431, MA441, MA451, MA521, MA531, MA541, MA551, MA561, MA571, MA581, MA621, MA641, MA851, MA881, MA911, MA921, MA931, MA941	MA371, MA411, MA431, MA441, MA931	STANDARD CYLINDER
ALL	5622-IC (F2)	MA371, MA411, MA431, MA441, MA451, MA521, MA531, MA541, MA551, MA561, MA571, MA581, MA621, MA641, MA851, MA881, MA911, MA921, MA931, MA941	MA371, MA411, MA431, MA441, MA931	INTERCHANGEABLE CORE

The new Falcon MA Series MA381 function uses unique CAMs to operate the lock. Different CAMs are required, depending on the handing of the lock. The charts on the next page indicate which CAMs are to be used for each configuration.

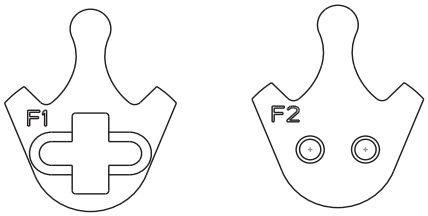

5622 **5622-IC**

Falcon MA381 Cylinder CAM Configuration Chart		
Door Hand	Inside Cyl. Cam	Outside Cyl. Cam
RH/RHR	5620-STD (R3)	5621-STD (R4)
LH/LHR	5620-STD (L3)	5621-STD (L4)

Falcon MA381 Cylinder CAM Configuration Chart (Interchangeable Core)		
Door Hand	Inside Cyl. Cam	Outside Cyl. Cam
RH/RHR	5620-IC (R3)	5621-IC (R4)
LH/LHR	5620-IC (L3)	5621-IC (L4)

LH/LHR

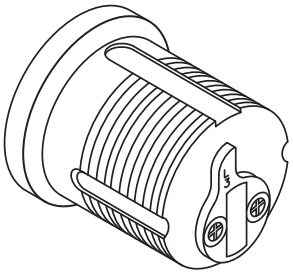

Inside (L3)

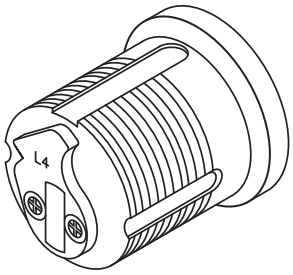

Outside (L4)

LH/LHR IC

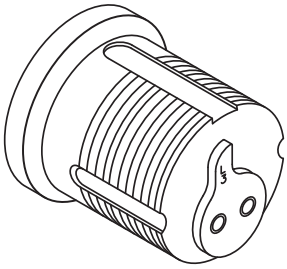

Inside (L3)

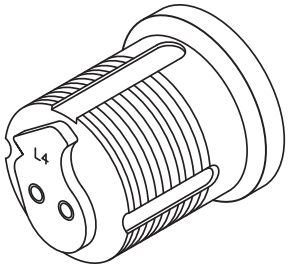

Outside (L4)

RH/RHR

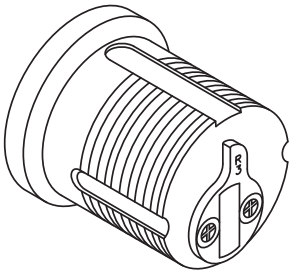

Inside (R3)

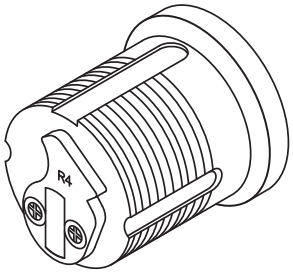

Outside (R4)

RH/RHR IC

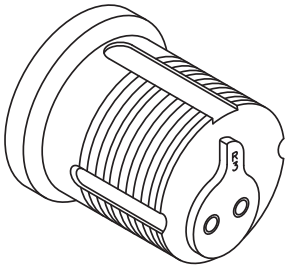

Inside (R3)

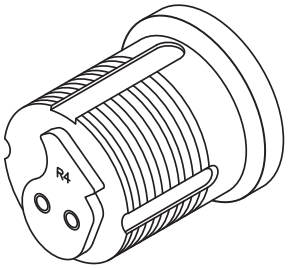

Outside (R4)

Complete cylinders can also be ordered for the MA381 function that will include the correct CAM (the door hand must be specified when ordering cylinders for the MA381).

CAMs for Schlage Cylinders

The Schlage Classic cylinders (C, E, and CE keyways) will also operate the Falcon MA Series locks using the 5622-STD CAM.

Mortise, Rim and Cam Lock for Standard Cylinders

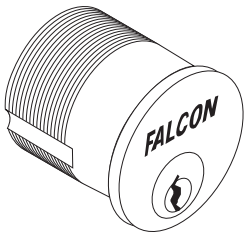

Note: Specify finish: 605, 606, 613, 625, 626, 630

Mortise Cylinder
Cylinders are furnished with #5622 cam unless otherwise specified.
See table for product numbers.
See page 37 for optional cams and 41 for collars.

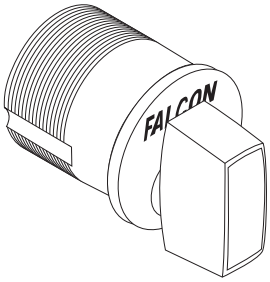

Note: Specify finish: 605, 606, 613, 625, 626, 630

Thumbturn Cylinder
Furnished with #5622 cam unless otherwise specified.
See table for product numbers.
See page 37 for optional cams and 41 for collars.

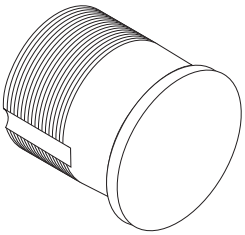

Note: Specify finish: 605, 606, 613, 625, 626, 630

Dummy Cylinder
Used to plug hole in door where lock remains but cylinder operation is no longer needed.
984 D 1”
985 D 1-1/8”

Keyed Mortise Cylinders

Catalog Number	Length	Pins	Application
985	1-1/8”	5 or 6	Generic
986	1-1/4”	5 or 6	Generic
987	1-3/8”	6 or 7	Generic
988	1-1/2”	6 or 7	Generic
990	1-3/4”	6 or 7	Generic
992	2”	6 or 7	Generic
250	1-1/8”	6	M451 hotel function
251	1-1/4”	6	M451 hotel function
252	1-3/8”	6	M451 hotel function
253	1-3/8”	7	M451 hotel function

Thumbturn Mortise Cylinders

Catalog Number	Length	Pins	Application
985T	1-1/8”	-	Generic
986T	1-1/4”	-	Generic
973	1-1/8”	-	M911 Classroom Thumbturn, RH (CCW)
974	1-1/8”	-	M911 Classroom thumbturn, LH (CW)

Cylinder Collars

Standard Collars for Cylinders Ordered Separately

Length	Cylinder	Non-AR Cams	AR Cam
1”	984D	A08794-000	-
1-1/8”	250, 965, 966, 973, 974, 985 Series	A08794-000	008876-002
1-1/4”	251, 986 Series	A08794-001	008876-003
1-3/8”	252, 253, 987, C987, C997	A08794-002	008876-004
Longer	C260 Series, (C)988, (C)990, (C)992	A08794-000	008876-000

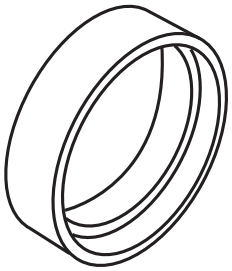

Escutcheon Trim Rings

Door Thickness	Function	985 1-1/8”	986 1-1/4”	(C)987 1-3/8”	(C)988 1-1/2”
1-1/2”	Single cylinder	-	A08790-000	A08790-001	A08790-002
1-1/2”	Double cylinder	A08790-000	-	-	-
1-3/4”	Single cylinder	-	-	A08790-000	A08790-001
1-3/4”	Double cylinder	-	A08790-000	A08790-001	A08790-002
2”	Single cylinder	-	-	A08790-000	A08790-001
2”	Double cylinder	-	-	A08790-000	A08790-001
2-1/4”	Single cylinder	-	-	-	A08790-000
2-1/4”	Double cylinder	-	-	-	-
2-1/2”	Single cylinder	-	-	-	-
2-1/2”	Double cylinder	-	-	-	-

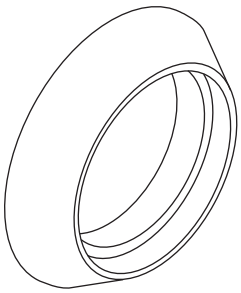

Sectional Trim Rings

Door Thickness	Function	985 1-1/8”	986 1-1/4”	(C)987 1-3/8”	(C)988 1-1/2”
1-1/2”	Single cylinder	A08794-001	A08794-002	-	-
1-1/2”	Double cylinder	A08794-002	A08794-003	-	-
1-3/4”	Single cylinder	A08794-000	A08794-001	-	-
1-3/4”	Double cylinder	A08794-001	A08794-002	A08794-002	-
2”	Single cylinder	-	A08794-000	A08794-001	A08794-002
2”	Double cylinder	A08794-000	A08794-001	A08794-002	A08794-003
2-1/4”	Single cylinder	-	-	A08794-000	A08794-001
2-1/4”	Double cylinder	-	A08794-000	A08794-001	A08794-002
2-1/2”	Single cylinder	-	-	-	A08794-000
2-1/2”	Double cylinder	-	-	A08794-000	A08794-001

Specify part number and finish when ordering.
(e.g. A08790-000-626)

Trim Rings & Collars

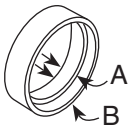

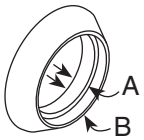

Dim. A	Dim. B	Part No.
3/32”	9/32”	A08790-000
7/32”	13/32”	A08790-001
11/32”	17/32”	A08790-002
15/32”	21/32”	A08790-003
43/64”	55/64”	A08790-004
3/32”	9/32”	A08794-000
7/32”	13/32”	A08794-001
11/32”	17/32”	A08794-002
15/32”	21/32”	A08794-003
1/8”	-	008876-000
3/16”	-	008876-005
1/4”	-	008876-001
3/8”	-	008876-002
1/2”	-	008876-003
5/8”	-	008876-004

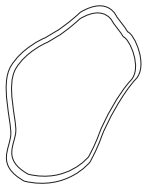

Wave washer included.
To order separately,
specify 008789-001-60.

008862-000
For all rim cylinders and cam locks.
Note: Specify finishes: 605, 606, 612, 613, 625, 626

Specify part number and finish when ordering.
(e.g. A08790-000-626)

Electrically Locking

MA851 Electrically Locked (Fail Safe):

Outside trim is continuously locked electrically. The latchbolt is retracted by a key outside or by the knob/lever inside. Switch or power failure allows the outside knob/lever to retract the latchbolt. The auxiliary latch deadlocks the latchbolt when the door is closed. The inside knob/lever is always free for immediate exit.

MA881 Electrically Unlocked (Fail Secure):

Outside trim is unlocked electrically. During switch or power failure, the latchbolt is retracted by a key outside or by knob/lever inside. The auxiliary latch deadlocks the latchbolt when the door is closed. The inside knob/lever is always free for immediate exit.

Electrical Requirements:

Voltage: 12V DC +/- 10%
Operating Temperature: Max +151° F, Min. -31° F
Operating Current: .42 Amps
Holding Current: .135 Amps

Voltage: 24V DC +/- 10%
Operating Temperature: Max +151° F, Min. -31° F
Operating Current: .21 Amps
Holding Current: .135 Amps

Typical Installation:

All installations should be in accordance with local electrical codes and National Electrical Code NFPA #70. It is recommended that each lock have its own 12 or 24 volt transformer. Be sure to select the proper transformer for the lock. Two or more locks may be operated in parallel from a single transformer provided it has the necessary current rating. DO NOT connect locks in series from a higher voltage rated transformer. Damage to locks may occur if they connect to a supply circuit that also contains electromagnetic devices. The transient voltage must be suppressed at the equipment producing them before connecting the locks to a circuit. A varistor rate at 35 volts (at peak current) may be used for transient voltage protection.

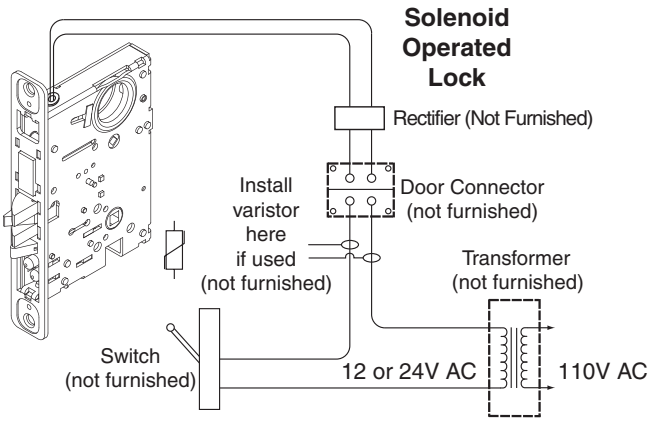

Ordering Procedures

How to Order

For correct ordering, and to ensure no delays in shipment of your order, the following descriptive data must be listed in the sequence shown. Necessary information can be found in other parts of this manual. The example below shows an order for 16 each MA locksets in the 521 Entry function, DG (Dane-Gala) trim design in a 626 (satin chrome) finish, 8 RH (right hand) and 8 LH (left hand) to accommodate doors 1¾" thick with AA1-AA16 keying.

Quantity: Indicate the quantity required.

Catalog Number: Select catalog number.

Trim Design: Indicate letter of knob or lever design followed by letter of rose or escutcheon design.

Example: DG-D for Dane lever followed by G for Gala rose.

Finish: When the finish is the same for the outside and inside trim, it is shown once (626). For split finishes, the outside is designated first, then the inside (626 x 625).

Latch: Two-piece mechanical anti-friction standard. All catalog numbers shown in this manual indicated 2¾" backset.

Strike: 4⅞" x 1¼" x 1¼" lip-to-center with curved lip standard. Optional strikes with shorter or longer lip lengths available.

Cylinder Type: For 6-Pin, add 6-Pin. For 7-Pin, add 7-Pin.

Door Hand: See chart.

Keying Detail: We suggest using the standard terms developed by the A.H.C. (Consult Factory).

Example: AA1 - Grand Master keyed, Master keyed, change key 1.

Interchangeable Core: To order product capable of accepting an interchangeable core, add "B" less SFIC (for interchangeable core). To order product with an interchangeable core, add "SFIC" (with interchangeable core). Ex: "G" with Falcon SFIC core.

Keyway: "G" is standard on regular cylinders, "A" is standard on interchangeable cores. Other keyways available. See price book.

Additional Keys: Note the total number of keys required.

Large Bow Keys: Add - "with large bow keys".

How to Order Example

							Door Hand				
Qty.	Catalog Number	Trim Design	Finish	Latch	Strike	Cylinder	RH	LH	RHR	LHR	Detail
8	MA521P	DG	626	STD	STD	6-PIN	X				AA1-AA8 1-3/4" DR
8	MA521P	DG	626	STD	STD	6-PIN		X			AA9-AA16 1-3/4" DR

Finishes

Falcon offers several finish choices to compliment the design elements of most any project. Falcon applies the best available protective plating or coating to the surface of our products to minimize the exposure to weather, pollution, perspiration, extremes of climate, frequency of us and other factors. Please consult with us if your building is subjected to chemical or corrosive conditions, as some finishes would not be recommended for these areas. Falcon recommends chrome plated or stainless steel finishes for high corrosive environments.

Trim Finishes Chart

Description	ANSI No.		Available on
Bright Brass	605	US 3	All Trim
Satin Brass	606	US 4	All Trim
Satin Bronze Oil Rubbed	613	US 10B	All Trim
Bright Chrome	625	US 26	All Trim
Satin Chrome	626	US 26D	All Trim
Satin Stainless Steel	630	US 32D	All Trim

How to Determine the Hand of a Door

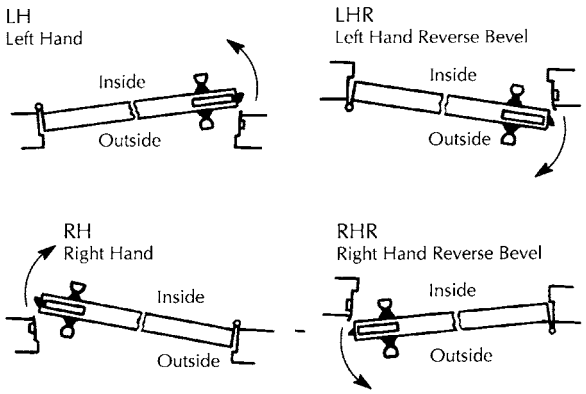

Q513-067

FALCON®

Instrucciones de instalación

Installation Instructions

Notice d'installation

Falcon MA-Lock

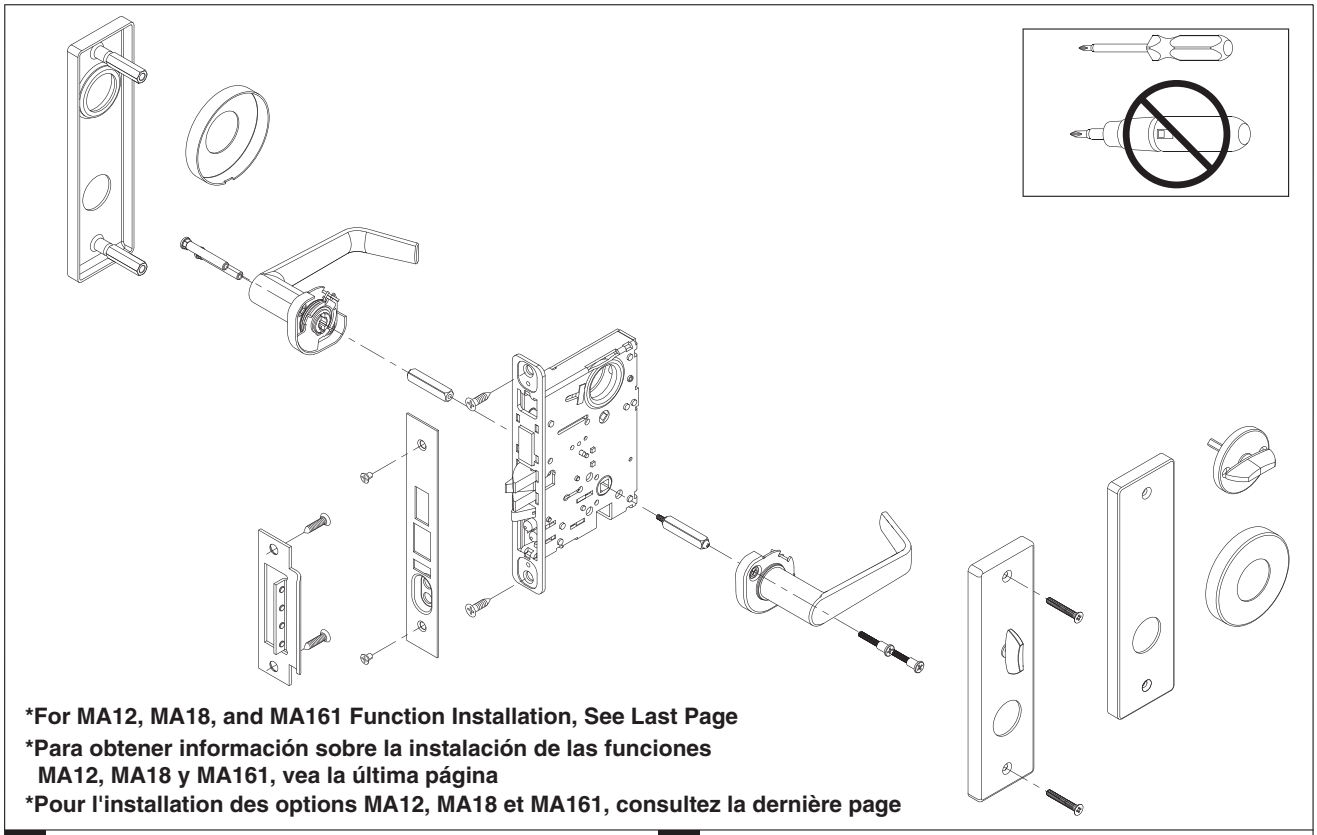

***For MA12, MA18, and MA161 Function Installation, See Last Page**
***Para obtener información sobre la instalación de las funciones MA12, MA18 y MA161, vea la última página**
***Pour l'installation des options MA12, MA18 et MA161, consultez la dernière page**

1 Install Lockcase
Instale la caja de la cerradura
Installez le mécanisme de serrure

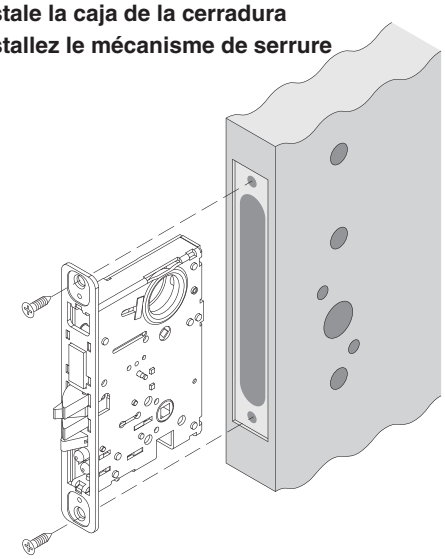

Fully Tighten in Step 8
Realice los ajustes completos en el paso 8
Serrez fermement à l'étape 8

2 Install Spindles and Screw Together
Instale los husillos y el tornillo juntos
Fixez ensemble les axes de poignée et la vis

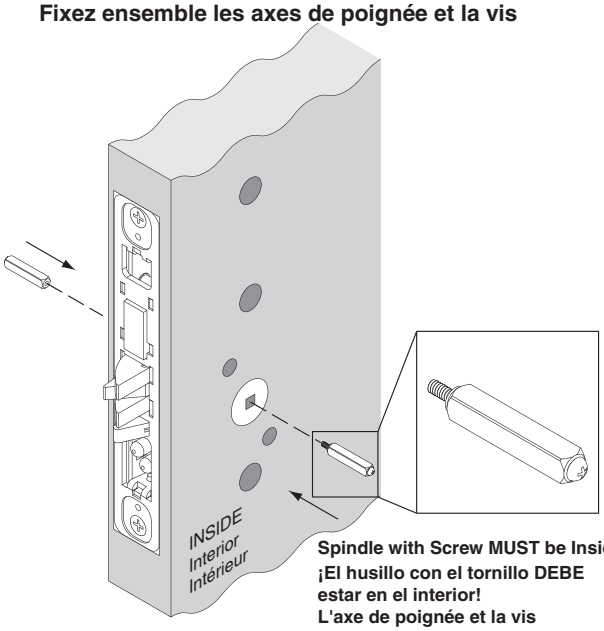

Spindle with Screw MUST be Inside!
¡El husillo con el tornillo DEBE estar en el interior!
L'axe de poignée et la vis DOIVENT être à l'intérieur!

3 **Install Lever Posts and Screws**
Instale los postes de la palanca y los tornillos
Installer les tiges de levier et les vis

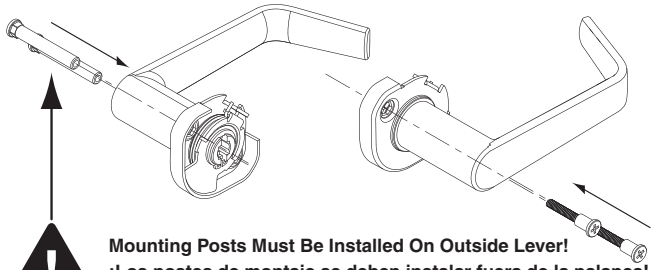

Mounting Posts Must Be Installed On Outside Lever!
¡Los postes de montaje se deben instalar fuera de la palanca!
Les tiges de montage doivent être installées à l'extérieur du levier!

4 **Install Lever Assemblies**
Instale los ensamblados de la palanca
Installez les assemblages de levier

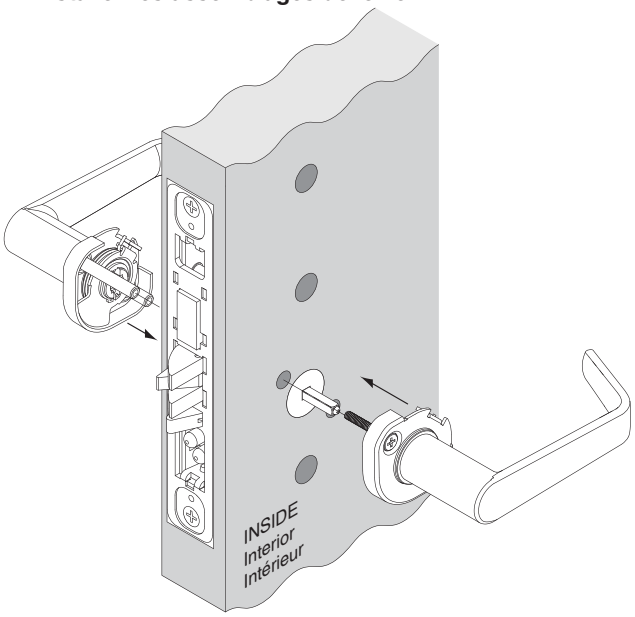

5

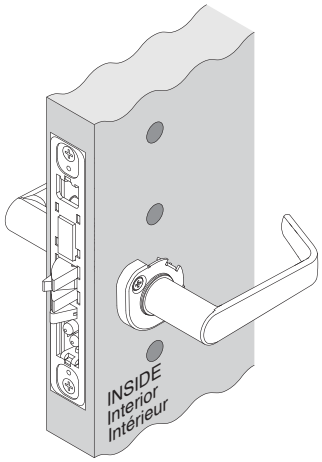

6 **Identify Trim and Install**
Identifique el ribete e instálelo
Identifiez la garniture et installez

Escutcheon with Thumbturn
Escudo con tuerca mariposa
Écusson et barrette tournante

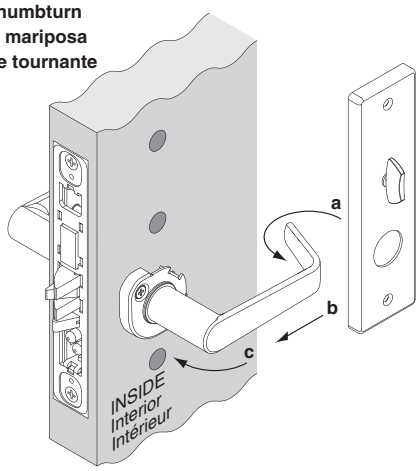

Escutcheon
Escudo
Écusson

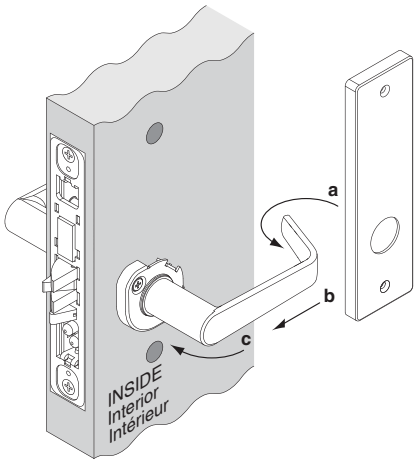

Rose
Rosetón
Rosette

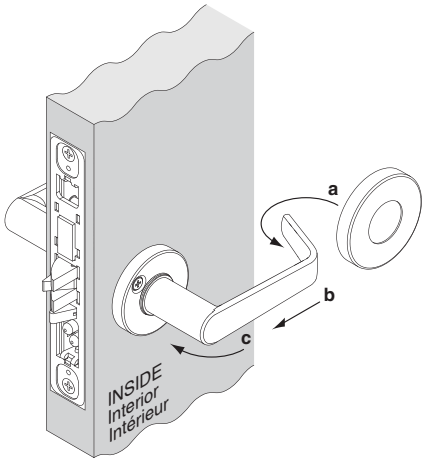

7 Identify Trim and Secure to Door
Identifique el ribete y asegúrelo en la puerta
Identifiez la garniture et fixez à la porte

Escutcheon with Thumbturn
Escudo con tuerca mariposa
Écusson et barrette tournante

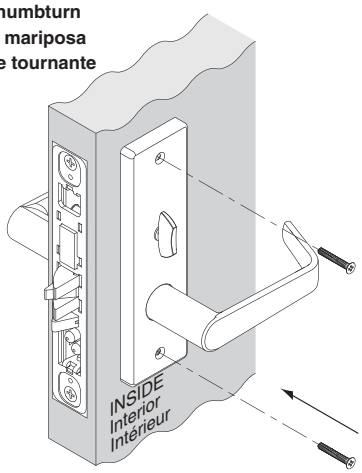

Escutcheon
Escudo
Écusson

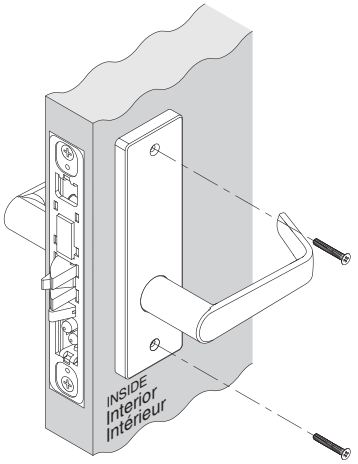

Rose with Thumbturn
Coloque el rosetón con la tuerca mariposa
Rosette et barrette tournante

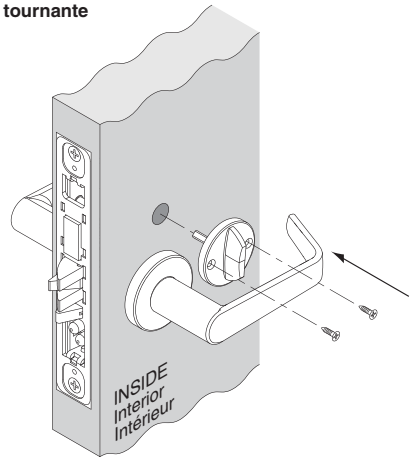

8 If Included, Install Cylinder
Si el cilindro está incluido, instálelo
Installez le cylindre, si inclus

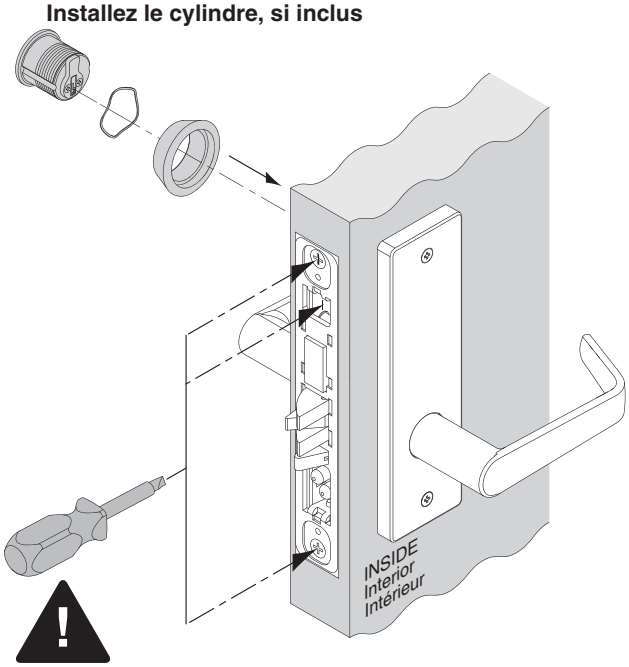

Cylinder and Mortise Retaining Screws MUST Be Fully Tightened!
¡El cilindro y los tornillos retenedores de la cerradura de muescas DEBEN estar bien ajustados!
Les vis de fixation du cylindre et de la mortaise DOIVENT être serrées fermement!

9 Install Armor Front
Instale el frente del blindaje
Installez la plaque de blindage

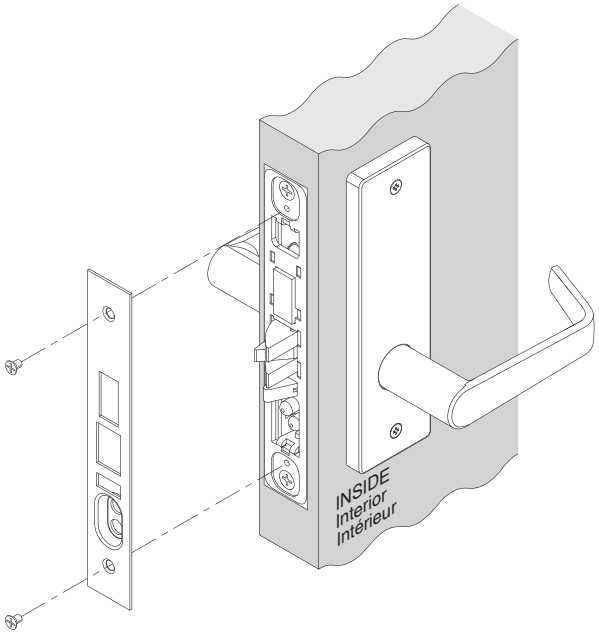

Mortise Rehanding (If Required)
Remanipulación de la cerradura de muescas (si se requiere)
Déplacement de la mortaise (si nécessaire)

a. Remove Screw
a. Quite el tornillo
a. Retirez la vis

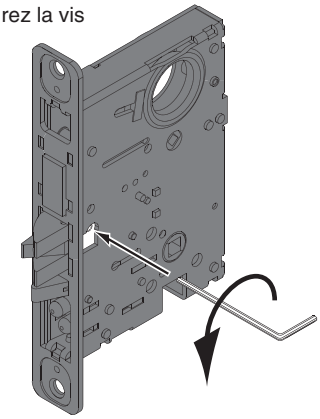

b. Remove Latch Bolt and Rotate 180˚
b. Quite el perno del pestillo y gírelo 180°
b. Retirez le pêne demi-tour et tourner à 180°

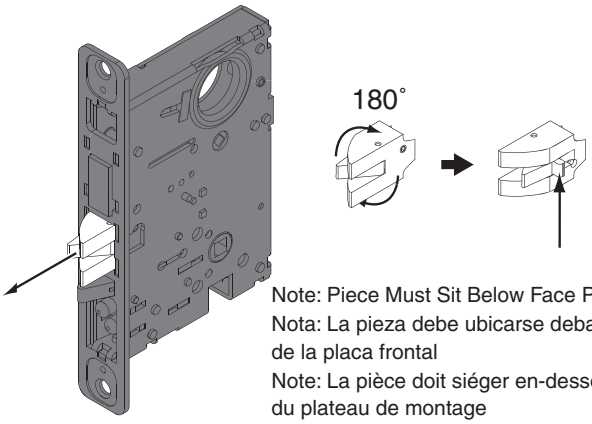

Note: Piece Must Sit Below Face Plate
Nota: La pieza debe ubicarse debajo de la placa frontal
Note: La pièce doit siéger en-dessous du plateau de montage

c. Reinstall Latch Bolt and Screw
c. Vuelva a instalar el perno y el tornillo del pestillo
c. Installez le pêne demi-tour et la vis

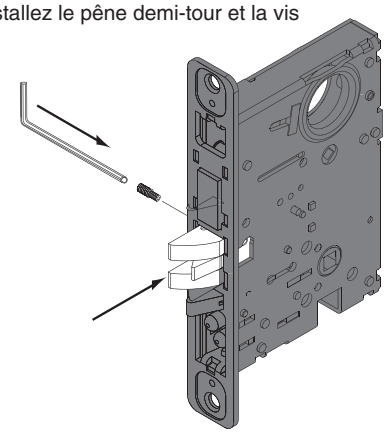

d. Move Handing Screws to Opposite Side
d. Mueva los tornillos de manejo al lado opuesto
d. Déplacer les vis de réglage du côté opposé

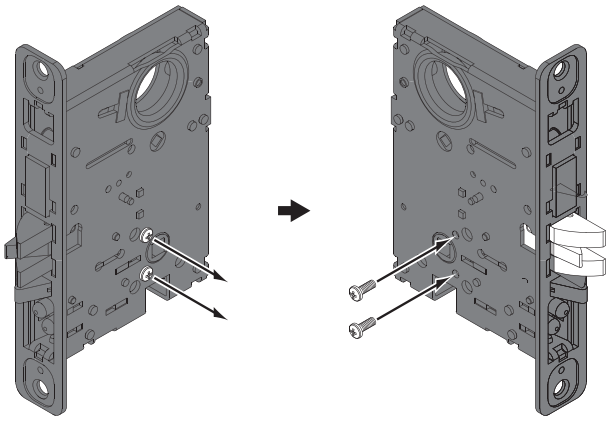

Note: Handing Screws to be Located on Non-Locking Side
Nota: Los tornillos de manejo se deben ubicar en el lado que no tiene la cerradura
Remarque : Les vis de réglage doivent figurer au côté sans verrouillage

MA551 Holdback Lock Handing
Manejo de la cerradura de retención MA551
Verrou de réglage de retenue MA551

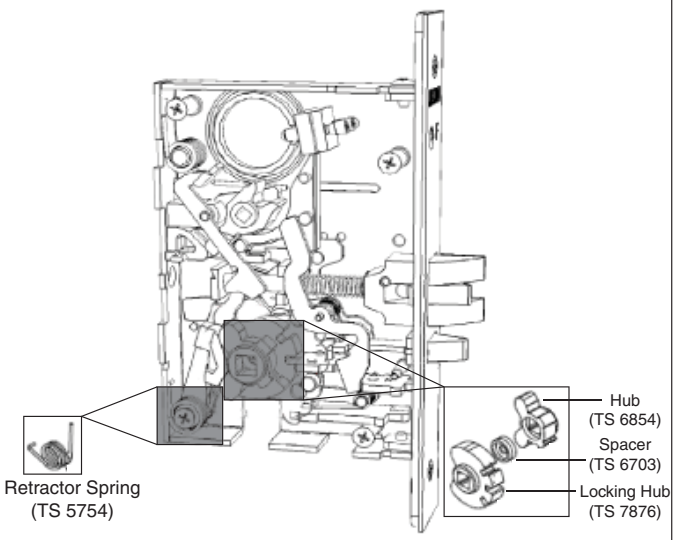

1) Remove Cover (Not Shown)
2) Remove Retractor Spring
3) Reverse the Order of Hub and Locking Hub
4) Replace the Retractor Spring and Cover
5) Change Direction of Latchbolt Head if Necessary

1) Quite la cubierta TS 7812-FAL (no se muestra)
2) Quite el resorte de retracción TS 5754
3) Invierta el orden de los cubos TS 7876 y TS 6854
4) Reemplace el resorte de retracción TS 5754 y la cubierta TS 7812-FAL
5) Si es necesario, cambie la dirección del cabezal del pestillo de resorte

1) Enlevez le couvercle TS 7812-FAL (non illustré)
2) Enlevez le ressort de retrait TS 5754
3) Inversez l'ordre des moyeux TS 7876 et TS 6854
4) Remplacez le ressort de retrait TS 5754 et le couvercle TS 7812-FAL
5) Modifiez la direction de la tête de pêne demi-tour, si requis

Special Function Installation
Instalación de funciones especiales
Installation des fonctions spéciales

MA12 - Single Dummy Installation
MA12 - Instalación de vástago simple
MA12 - Installation d'une fausse poignée

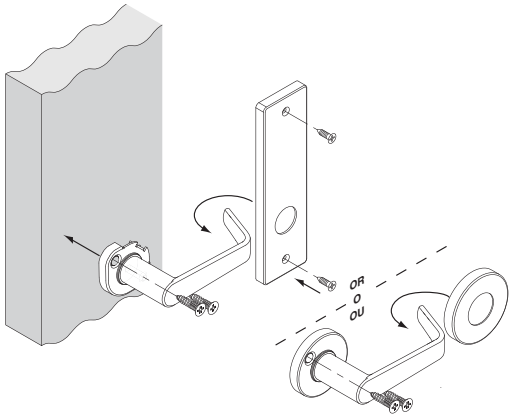

MA18 - Double Dummy Installation
MA18 – Instalación de vástago doble
MA18 - Installation de deux fausses poignées

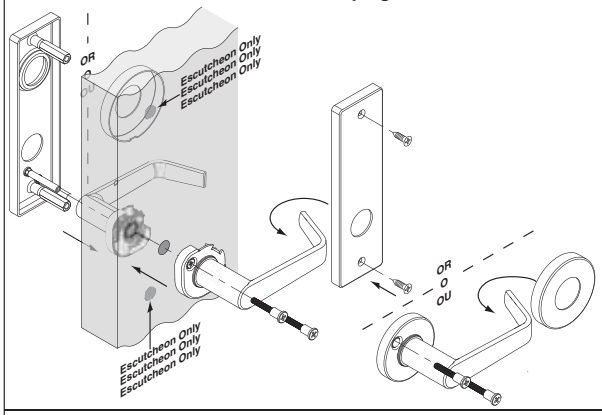

MA161 - Exit or Communicating Lock
MA161 – Cerradura de salida o comunicación
MA161 - Verrou de sortie ou de porte communicante

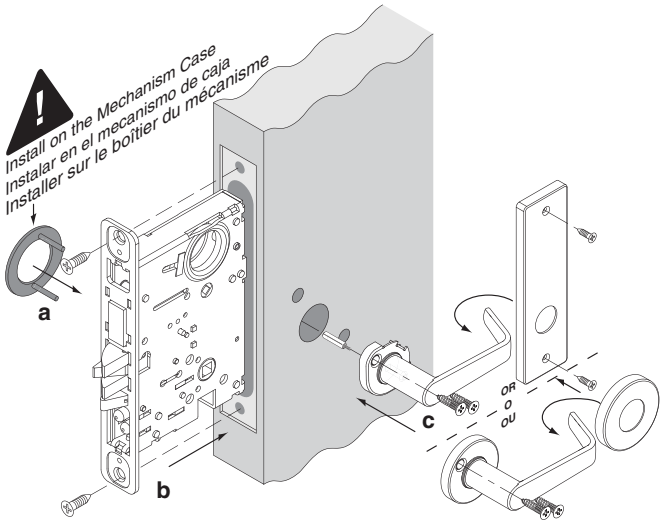

MA551 Holdback
MA551 la función de retención
MA551 la fonction de retenue

To Activate Holdback Function
Para activar la función de retención
Pour activer la fonction de retenue

1) From the Unlocked Position, Rotate Outside Knob/Lever to Retract Latchbolt
2) Rotate Key 360˚ Counterclockwise
3) Release Lever/Knob

1) Cuando la cerradura está abierta, gire la palanca/perilla exterior a la posición del pestillo de resorte retráctil
2) Gire la llave 360° en sentido antihorario
3) Suelte la palanca/perilla

1) À partir de la position non verrouillée, tournez le bouton ou le levier extérieur pour dégager le pêne demi-tour
2) Tournez la clef à 360° dans le sens antihoraire
3) Relâchez le levier/bouton

To Deactivate Holdback Function
Para desactivar la función de retención
Pour désactiver la fonction de retenue

1) Insert Key and Rotate 360˚ Clockwise
1) Inserte la llave y gírela 360° en sentido horario
1) Insérez la clef et tournez 360° dans le sens horaire

©2010 Schlage Lock Company
(800) 847- 1864
Printed in Country
Q513- 067 Rev. 6/10- a

NOTE: These templates are not scale; do NOT print to use as dimensional template.

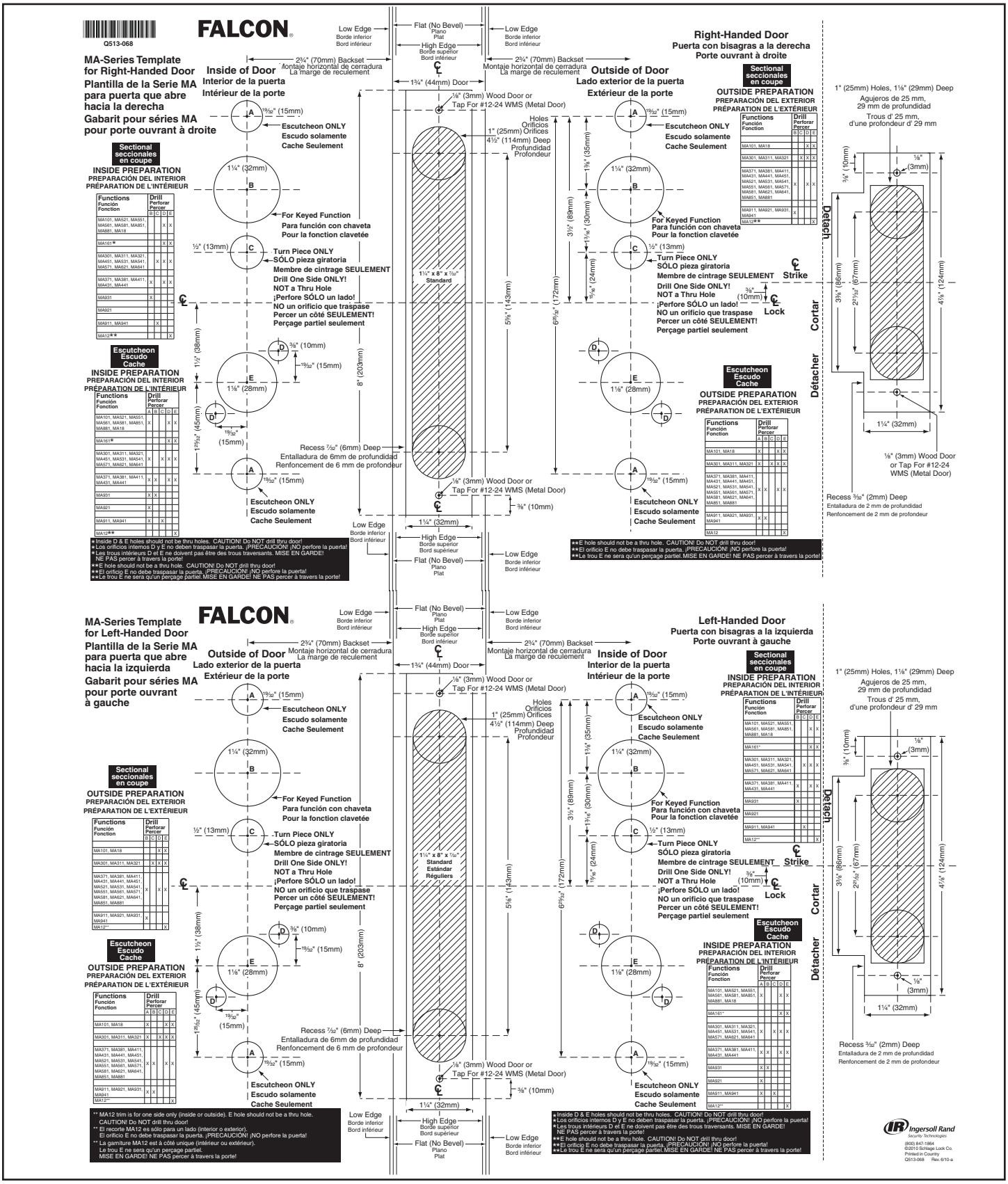

Ingersoll Rand
Security Technologies

Ingersoll Rand's Security Technologies Sector is a leading global provider of products and services that make environments safe, secure and productive. The sector's market-leading products include electronic and biometric access-control systems; time-and-attendance and personnel scheduling systems; mechanical locks; portable security; door closers, exit devices, architectural hardware, and steel doors and frames; and other technologies and services for global security markets.

800.847.1864

www.falcon.ingersollrand.com

©2010 Ingersoll Rand Company FA-5885 Rev. 6-10 Printed in U.S.A.