TEL 905.695.2055 **toll free** 1.800.660.5391
FAX 905.695.2056 **toll free** 1.800.660.5390
33 West Beaver Creek Road Richmond Hill, Ontario Canada L4B 1L8

CROSSLEY, 6LT CHANDELIER

PRODUCT DETAILS

No.	:	39313-010
Product Color	:	CHROME
Shade / Accent Colour	:	CHROME
Diameter	:	32.5"
Height	:	9"
Weight	:	23.1lbs

LIGHT SOURCE DETAILS

Light Source Type	:	INTEGRATED LED
Input Voltage	:	120V
Bulb Voltage	:	25.6V
Socket Type	:	LED
Total Wattage	:	40.5W
Total Lumen	:	3630lm
Kelvin	:	3000K
CRI	:	90
Dimmable	:	Yes

OPTIONS AVAILABLE

ITEM NO.	FINISH	SHADE
39313-010	CHROME	CHROME

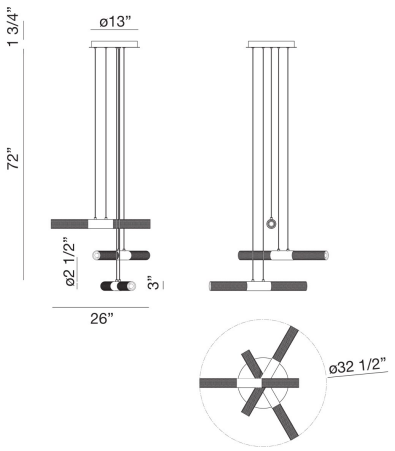

TECHNICAL DETAILS

Hanging Support Type	:	AIRCRAFT CABLE
Hanging Support Length	:	72"
Canopy / Backplate Height	:	1.75"
Canopy / Backplate Dia.	:	13"

PROJECT INFORMATION

Job Name: _____ Date: _____ Category: _____

Comments: _____