TEL 905.695.2055 **toll free** 1.800.660.5391
FAX 905.695.2056 **toll free** 1.800.660.5390
33 West Beaver Creek Road Richmond Hill, Ontario Canada L4B 1L8

NISS, 28" LINEAR PENDANT

PRODUCT DETAILS

No.	:	30295-018
Product Color	:	BLACK
Product Material	:	METAL
Shade / Accent Colour	:	BLACK
Shade / Accent Material	:	METAL
Length	:	28"
Width	:	2.5"
Height	:	3.75"
Overall Height	:	76.75"
Weight	:	4.4lbs

LIGHT SOURCE DETAILS

Light Source Type	:	INTEGRATED LED
Input Voltage	:	120V
Bulb Voltage	:	120V
Total Wattage	:	18W
Total Lumen	:	940lm
Kelvin	:	3000K
CRI	:	80+
Dimmable	:	Yes

TECHNICAL DETAILS

Light Direction	:	Down
Hanging Support Type	:	AIRCRAFT CABLE
Hanging Support Length	:	72"
Canopy / Backplate Length	:	20.75"
Canopy / Backplate Height	:	1"
Canopy / Backplate Width	:	6.5"
Adjustable Lamp Head	:	Yes
Location	:	DRY
Approval	:	

Options Available

ITEM NO.	FINISH	SHADE
30295-018	BLACK	BLACK

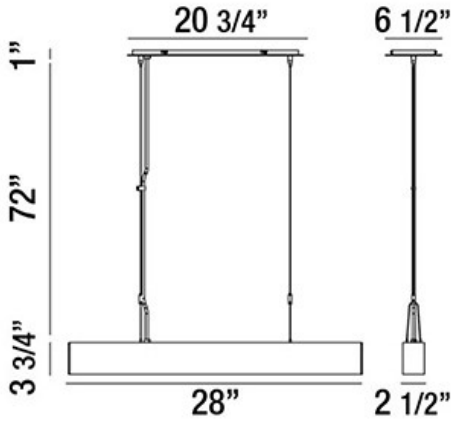

PROJECT INFORMATION

Job Name: Date: Type:

Comments: