Gyro II | E24787-BKPC

Job Name:_____ Job Type:_____ Quantity:_____ Comments:_____

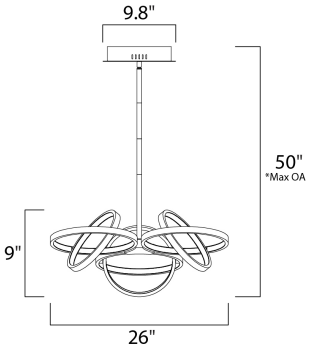

*max overall height

Measurements:

Height	Width	Length	
9.00''	26.00''	26.00''	
Max OAH	Min OAH		
50.00''	14.50''		
Hanging Weight	Canopy Width	Canopy Height	Canopy Length
9.02 lb	9.80''	2.00''	9.80''

Lamping:

LED PCB	5,140 Rated Lumens
6 W PCB	3000 Color Temperature
73.44 total watt	80+ CRI
Dimmable : Triac	

Shipping:

Carton Weight	Carton Width	Carton Height	Carton Length
12.32 lb	27.17''	5.12''	31.89''
Master Pack Qty	UPC	UPS	
1.0000	845094082712	Yes	

Finish:

Black and Polished Chrome BKPC

Material:

Metal, Aluminum, Acrylic

Certification:

Dry Location

Additional:

PCB (Included)
Adjustable