# **Bracelet |** E21212-20PC

Job Name:_____ Job Type:_____ Quantity:_____ Comments:_____

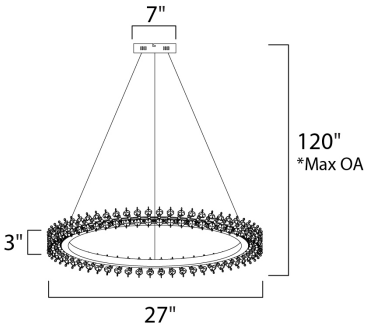


*max overall height

**Measurements:**

| Height | Width | Length | |
|---|---|---|---|
| 3.00'' | 34.00'' | 34.00'' | |
| Max OAH | Min OAH | | |
| 120.00'' | 10.00'' | | |
| Hanging Weight | Canopy Width | Canopy Height | Canopy Length |
| 10.34 lb | 7.00'' | 1.50'' | 7.00'' |

**Lamping:**

| | |
|---|---|
| LED PCB | 2,100 Rated Lumens |
| 1 30W PCB | 4000 Color Temperature |
| 30 total watt | 90+ CRI |
| Dimmable : Triac | |

**Shipping:**

| Carton Weight | Carton Width | Carton Height | Carton Length |
|---|---|---|---|
| 12.54 lb | 38.58'' | 4.33'' | 38.58'' |
| Master Pack Qty | UPC | UPS | |
| 1.0000 | 845094082514 | Yes | |

**Finish:**

Polished Chrome PC

**Glass:**

Crystal 20

**Material:**

Stainless Steel

**Certification:**

Dry Location

**Additional:**

PCB (Included)
Adjustable


ET2 Contemporary Lighting™

253 NORTH VINELAND AVE. | CITY OF INDUSTRY, CA 91746
T. 626.956.4200 | F. 626.956.4225

et2online.com
#ET2lighting



Always consult a qualified, licensed electrician before installation of any products...