Flute | E10010-RG

Job Name:_____ Job Type:_____ Quantity:_____ Comments:_____

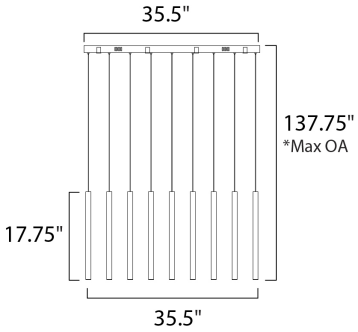

*max overall height

Measurements:

Height	Width	Length	
17.75''	11.00''	35.50''	
Max OAH	**Min OAH**		
137.75''	19.25''		
Hanging Weight	**Canopy Width**	**Canopy Height**	**Canopy Length**
28.42 lb	35.50''	1.50''	12.00''

Lamping:

LED COB	2,450 Rated Lumens
35 1W COB	3000 Color Temperature
35 total watt	90+ CRI
Dimmable : Triac	

Shipping:

Carton Weight	Carton Width	Carton Height	Carton Length
37.18 lb	8.66''	7.87''	36.22''
Master Pack Qty	**UPC**	**UPS**	
1.0000	845094082309	Yes	

Finish:

Rose Gold RG

Material:

Stainless Steel

Certification:

Dry Location

Additional:

COB (Included)
Adjustable