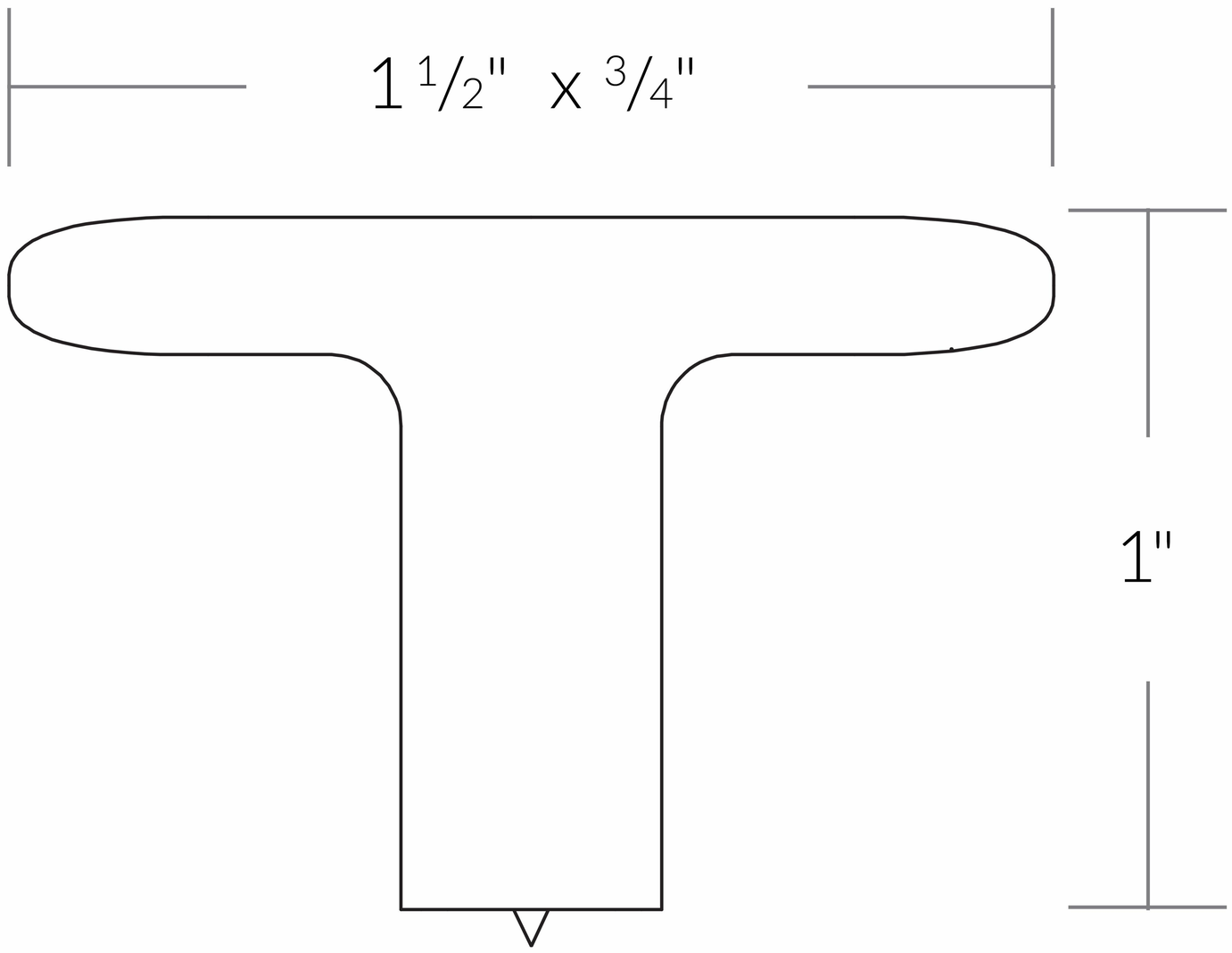

DIMENSIONS

T-KKNOB