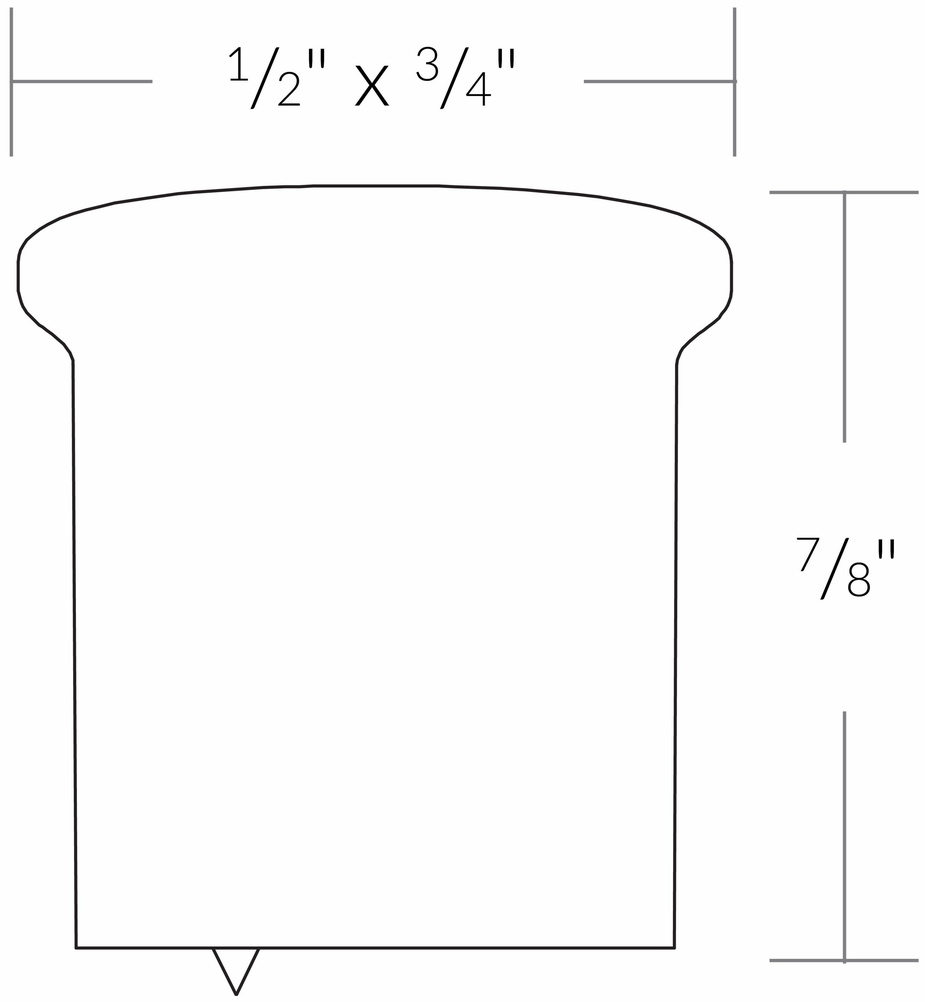

DIMENSIONS

BUTTON KNOB