MODEL#: **ES1815PL**
PRODUCT SPECIFICATION SHEET

Elements Of Design

MODEL SHOWN: ES1815PL

Note: Photo above and Drawing below shows overall style of the product, handle styles may be different to the product model number this specification sheet is refering to

DESCRIPTION:

Deck Mount Widespread Kitchen Faucet w/ Brass Sprayer, 9–1/2" Spout Reach

WATER FLOW RATE (If applicable):

2 GPM (7.5 LPM) Max @ 60 PSI

AVAILABLE FINISHES:

Chrome, Polished Brass, Oil Rubbed Bronze, Satin Nickel

CARTRIDGES (If applicable):

CARTRIDGE TYPE	MODEL #
Hot Cartridge	Not Applicable
Cold Cartridge	Not Applicable
Shared or Single H&C Cartridge	KSRP1811C
Diverter (If applicable)	Not Applicable

Note: Please always check with Elements of Design Customer Service for Cartridge Model Number Verification before you order.

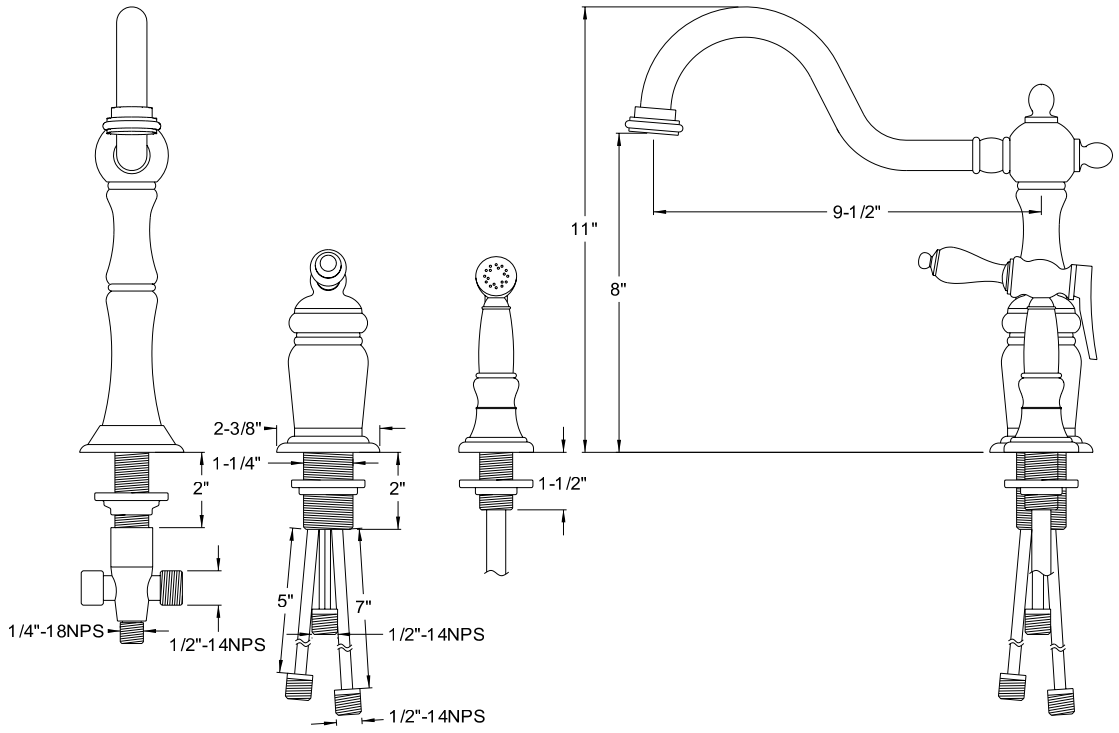

T 909.465.6687 F 909.548.0668