MODEL#: **ES2368NL**
PRODUCT SPECIFICATION SHEET

Elements Of Design

MODEL SHOWN: ES2368NL

Note: Photo above and Drawing below shows overall style of the product, handle styles may be different to the product model number this specification sheet is refering to

DESCRIPTION:

Roman Tub Filler, 7" Spout Reach, 8" – 14" Adjustable Spread, Quick Connect Spout, 3/4" Hi-Flow Cartridge

WATER FLOW RATE (If applicable):

15-17 GPM (56-64 LPM) Max @ 60 PSI

AVAILABLE FINISHES:

Chrome, Polished Brass, Oil Rubbed Bronze, Satin Nickel

CARTRIDGES (If applicable):

CARTRIDGE TYPE	MODEL #
Hot Cartridge	KSRPT5000HC
Cold Cartridge	KSRPT5000CC
Shared or Single H&C Cartridge	Not Applicable
Diverter (If applicable)	Not Applicable

Note: Please always check with Elements of Design Customer Service for Cartridge Model Number Verification before you order.

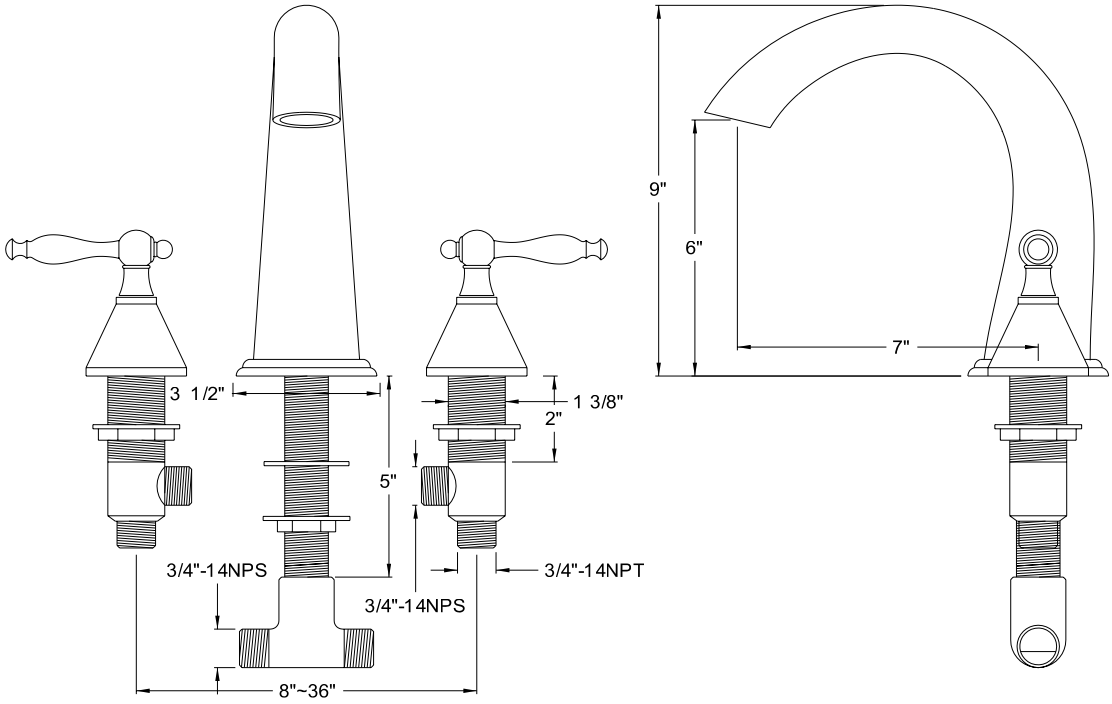

T 909.465.6687 F 909.548.0668