# MODEL#:**DT0612AL**
## PRODUCT SPECIFICATION SHEET

Elements Of Design

**DESCRIPTION:**

Leg Tub Filler & Shower, Pvd, (1)Cc61T2* + (4)Ccml2

**CARTRIDGES (If applicable):**

| CARTRIDGE TYPE | MODEL # |
|---|---|
| Hot Cartridge | KSRPT1000HC |
| Cold Cartridge | KSRPT1000CC |
| Shared or Single H&C Cartridge | |
| Diverter (If applicable) | |

**Note:** Please always check with Elements of Design Customer Service for Cartridge Model Number Verification before you order.
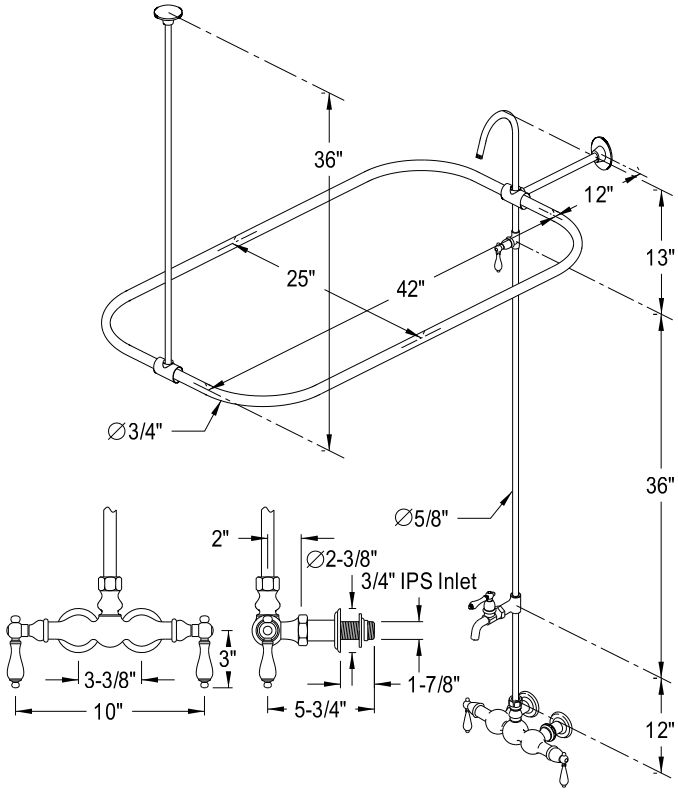
**Note:** Photo above and Drawing below shows overall style of the product, handle styles may be different to the product model number this specification sheet is refering to.