ELEGANT

FURNITURE & LIGHTING ™

Collection:Bodine

Installation manual for:

OD337P16BK L7" W7" H16" L1

Installation instructions:

1.Install E26 light source.(Bulbs not supplied) .
2.Install glass sheet (P15) to lamp body(P9) and use screw(P7)&clips(P8) fixable
3.Connect cover(P6) and lamp body(P9) with screw(P3) and rubber ring(P4).
4.Black wire from ceiling(junction box) attaches to "L"wire from the fixture
5.White wire from ceiling(junction box) attaches to "N"wire from the fixture
6."E" wire from the ceiling attaches to "E" wire from the fixture.
7.Use explosion screw to fix location and use explotion screw(P1) to screw base(P2).
8.Put lamp body into base(P2) and use screw in(P12)

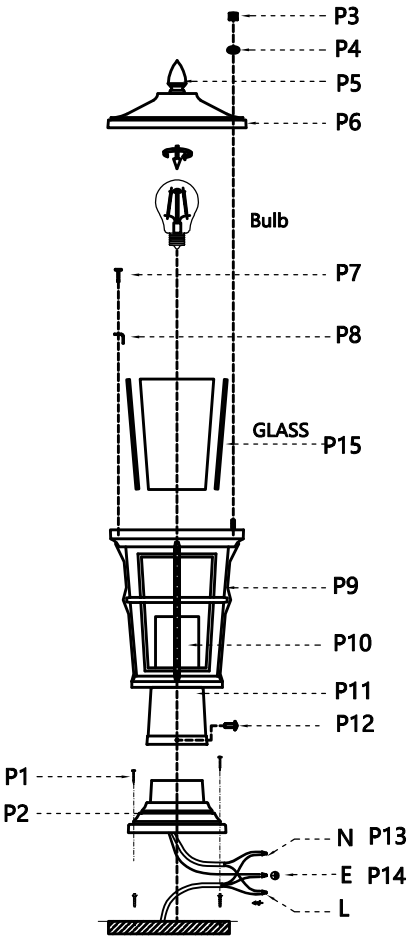

Part Number	Part	Picture	Description	Qty
LB12P01	P1		Explosion screw M4	4
	P2		5.5"*2.95" Lamp base	1
P-OD337P16BK-1	P3		Screw cap	2
	P4		Rubber ring	2
	P5		Top cap (L0.9"*H"1.65")	1
	P6		Cover(7"*1.69")	1
	P7		Screws M4	4
	P8		Clips (0.59"*0.55"*0.51"*T=0.03")	4
	P9		Body (L6.88"*W6.88"*H8")	1
	P10		E26 Holder	1
	P11		lamp pole (3.38"*3.22")	1
	P12		Screws M4	3
	P13		UL18#,L12"Black+White	1
	P14		UL18#Ground wire,L9.8"	1
GP12L23	P15		Glass sheet (L4.7"*W3.6"*H7")	4

"L" = Hot wire
"N" = Neutral wire
"E" = Ground wire