Collection:Enzo

Installation manual for:

LD8024D18C D18″ H18″L4

Installation instructions:

1. Check all of the package contents before installation.
2. Screw the Nipple(P10)into the hex joint and tighten up with the Loop(P9).
3. Put the Socket cover(P11)on the Socket(P12) .
4. Srew the Nipple(P4) into the Crossbar(P1) then use the Hex nut(P3)to adjust the length and tighten it.
5. Fix the Crossbar (P1)on the outlet box with Screw(P2) .
6. Connect the wire with L marking from the fixture to the BLACK wire from outlet box.
7. Connect the wire with N marking from the fixture to the WHITE wire from outlet box.
8. Install the E wire from the fixture on the Crossbar(P1) and connect it to the grounding conductor from the supply circuit.
9. Screw the chain holder (P7) onto the end of the nipple(P4). Place the canopy (P5) over the chain holder (P7) and nipple (P4) and secure it to the ceiling by tightening the ring (P6).
10. Put one quick link(P17) on chain holder(P7) and the other quick link(P17) on chain loop(P9).Adjust and hang the fixture.
11. Install the light bulbs (not included) into the sockets(P12).
12. Connect the power.

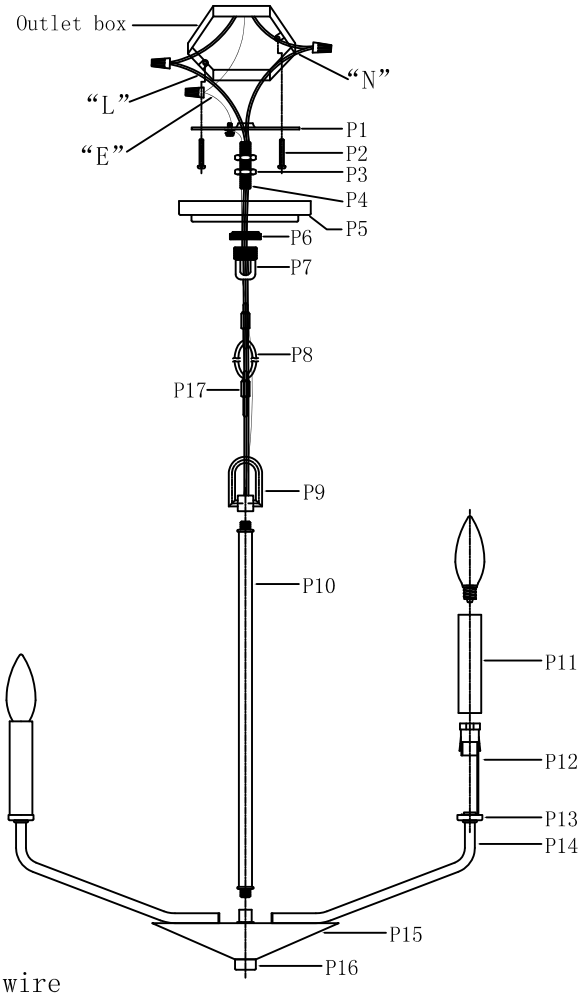

"L" = Hot wire
"N" = Neutral wire
"E" = Ground wire

PARTS LIST

part	picture	Description	Qty	Check list
P1		Crossbar	1	
P2		8/32″ Screw	2	
P3		1/8 IP Hex nut	2	
P4		1/8 IP Nipple	1	
P5		ϕ5 Canopy	1	
P6		Canopy ring	1	
P7		Chain holder	1	
P8		L60″Chain04P Plain design	1	
P9		Loop	1	
P10		ϕ12.7 Nipple	1	
P11		ϕ22 Socket cover	4	
P12		E12 Socket	4	
P13		Cup	4	
P14		Arm	4	
P15		Cup	1	
P16		Finial	1	
P17		Quick link	2	