Collection:Hugh

Installation manual for:

LD6232C L36"W10"H12.25" L3

Installation instructions:

1. Black wire from ceiling(junction box) attaches to "L"wire from the fixture.
2. White wire from ceiling(junction box) attaches to "N"wire from the fixture.
3. "E" wire from the fixture is attaced to the mounting bracket and an additional "E" wire from the mounting bracket must be secured to the junction box.
4. Secure mounting bracket to the junction box.
5. Insert screws（P2） in side of top unit the mounting bracket.
6. Put the canopy (P3) on the mounting bracket(P1) and use the screw(P4) to screw tighten.
7. Place the glass shade (P11) on the lamp head and twist it with the outer ring of the lamp head.
8. Install E26 light source,no include bulb.

The end!

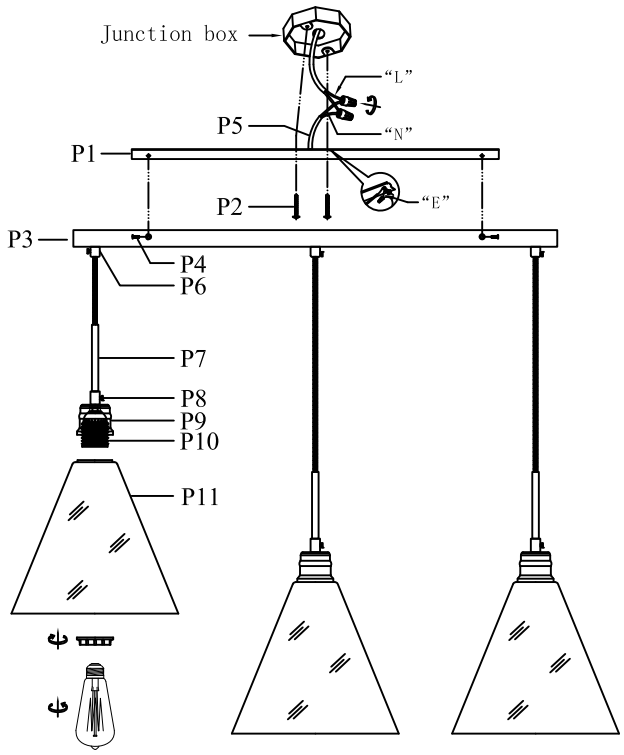

"L" = Hot wire
"N" = Neutral wire
"E" = Ground wire

PARTS LIST

part	picture	Description	Qty	Check list
P1		W5.12"*L21.65" Mounting bracket	1	
P2		5/32-32 Screw	2	
P3		L28.55"W5.5"H1" Canopy plat	1	
P4		5/32-32 Screw	4	
P5		Power Cord 1' Black	1	
P6		Car iron parts	3	
P7		L4.15"Tube	3	
P8		Coupling	3	
P9		D2" Socket cover	3	
P10		E26 Socket	3	
P11		D10"*L9" Glass shade	3	