Collection:Eclipse
Installation manual for:

LD6038SG D12" H13" L1

Installation instructions:

1. Black wire from ceiling(junction box) attaches to "L"wire from the fixture.
2. White wire from ceiling(junction box) attaches to "N"wire from the fixture.
3. "E" wire from the fixture is attaced to the mounting bracket and an additional "E" wire from the mounting bracket must be secured to the junction box.
4. Secure mounting bracket to the junction box.
5. Insert screws（P2） in side of top unit the mounting bracket.
6. Place the top suction plate(P3) on the hanging plate (P1) and screw(P4) tightly.
7. Install E26 light source,no include bulb.
8. Place the glass cover (P15) on the semicircular cover (P9).

The end!

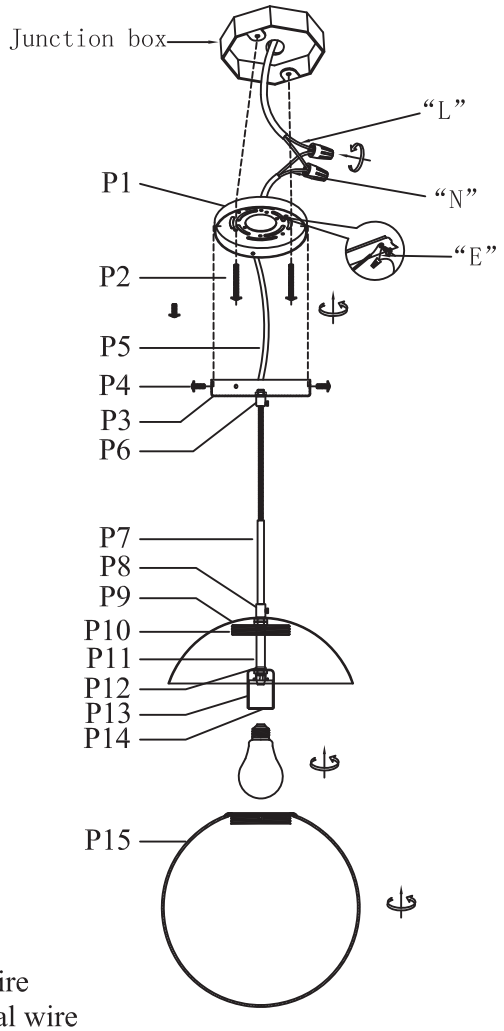

"L" = Hot wire
"N" = Neutral wire
"E" = Ground wire

PARTS LIST

part	picture	Description	Qty	Check list
P1		D5.5″ Mounting bracket	1	
P2		5/32-32 Screw	2	
P3		D6″ Canopy plat	1	
P4		5/32-32 Screw	3	
P5		Two-core Power Cord 5.6' Black	1	
P6		Car iron parts	1	
P7		L5.24″Tube	1	
P8		Coupling	1	
P9		D11″ Semicircular cover	1	
P10		D3.45″ Screw die	1	
P11		L2.56″ Candle cover	1	
P12		Check ring	2	
P13		Socket cover	1	
P14		E26 Socket	1	
P15		D12″ Milk Glass	1	