SUPER SLIM

2-HANDLE THERMOSTATIC ROUGH WITH 3-WAY DIVERTER

- Ceramic disc valve cartridge
- Forged brass valve body with built-in check stops
- 3-Way Diverter options include discrete or shared functions
- ½″ Wax thermostatic unit permits shuttle valve to move between the hot and cold seats to maintain the preselected constant water temperature
- ½″ NPT Inlets/Outlets
- Includes Adjustable Hot Limit Safety Stop
- Maximum temperature limit is 120°F

CODES AND STANDARDS

Meets or Exceeds ASME A112.18.1/CSA B125.1/ASSE 1016

DESCRIPTION	PRODUCT NUMBER
2-Handle Thermostatic Rough Valve with 3-Way Diverter *(Discrete Functions)*	D35005523.191
2-Handle Thermostatic Rough Valve with 3-Way Diverter *(Shared Functions)*	D35005523S.191

DIVERTER OPERATION

D35005523.191 *DISCRETE FUNCTIONS*	D35005523S.191 *SHARED FUNCTIONS*
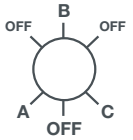	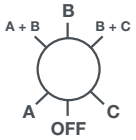

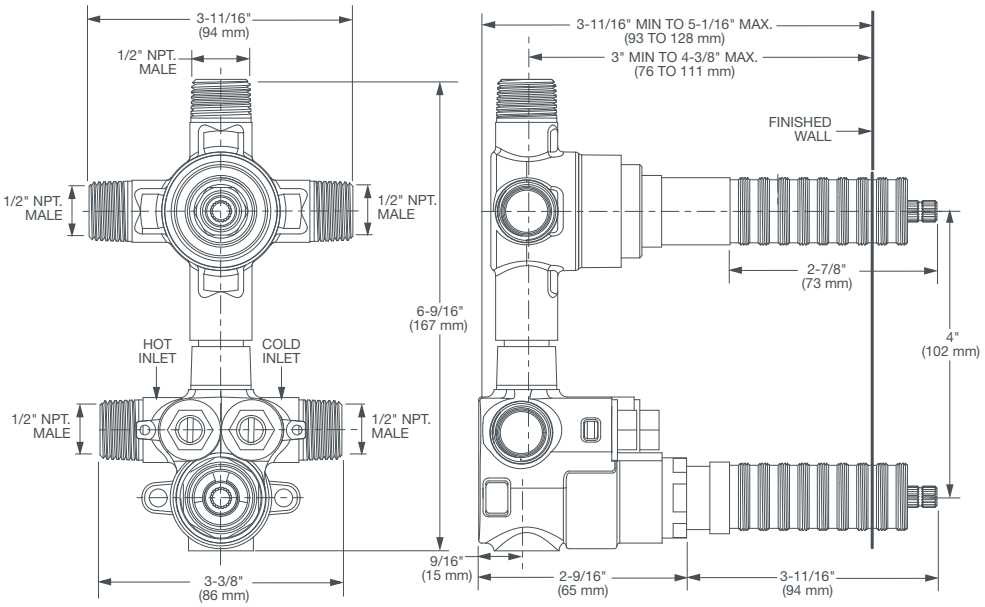

IMPORTANT: These measurements are subject to change or cancellation.

No responsibility is assumed for use of superseded or voided pages.

CEC and CALGreen Compliant

PART OF LIXIL

©2017 AS America Inc.