ST. GEORGE®

PEDESTAL LAVATORY

FEATURES

- Recessed rear overflow
- Vitreous china
- 8″ faucet spread

DIMENSIONS

NOMINAL DIMENSIONS

23-3/4″ x 20-1/8″ x 35-1/4″ (603 x 511 x 895 mm)
Open Back Pedestal

BOWL INSIDE DIMENSIONS

19-1/8″ (486 mm) wide
12-7/16″ (316 mm) front to back
5-7/8″ (150 mm) depth

COLORS/FINISHES

Canvas White (415), Biscuit (071)

COMPONENTS

D20005008.XXX Lavatory - Three Hole
D21005000.XXX Pedestal Base Only

COMPLIANCE CERTIFICATIONS

Meets or Exceeds ASME A112.19.2/CSA B45.1

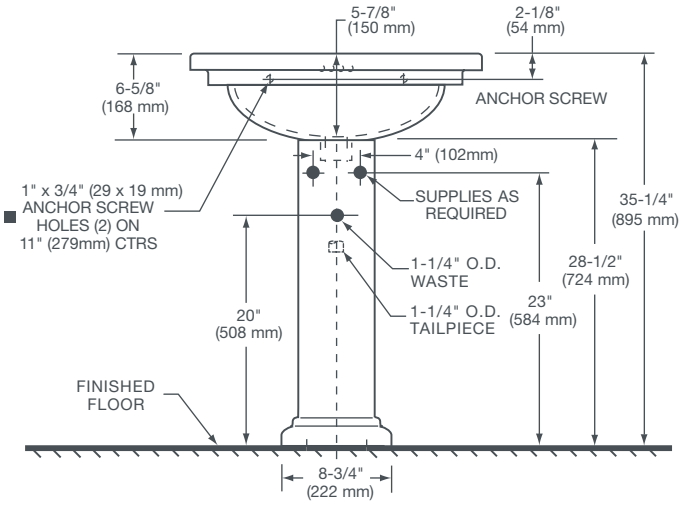

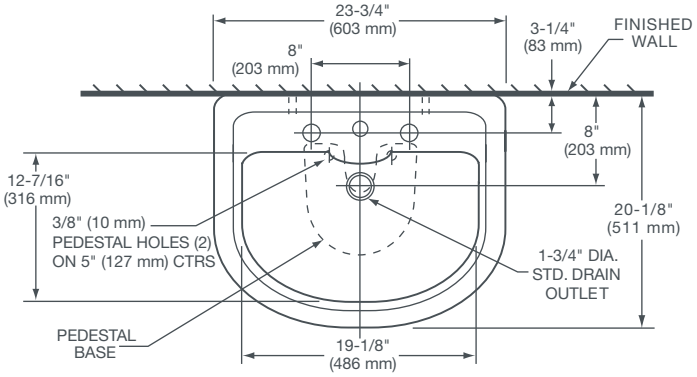

NOTES:

Dimensions shown for location supplies and "P" trap are suggested. Provide suitable reinforcement for all wall supports.
Slab/pedestal anchors and mounting features to be furnished by others.
Fittings not included with fixture and must be ordered separately.

Installation Instructions supplied with lavatory.

Dimensions of fixtures are nominal and may vary within the range of tolerance established by ANSI standards.
These measurements are subject to change or cancellation. No responsibility is assumed for use of superseded or voided pages.

©2015 AS America Inc.