Toe Tap Bath Drain

Specifications

Material Content: Brass hardware

Push down to seal water

1-1/2" Connection

PVC pipe sold separately P# 522458





Dimensions

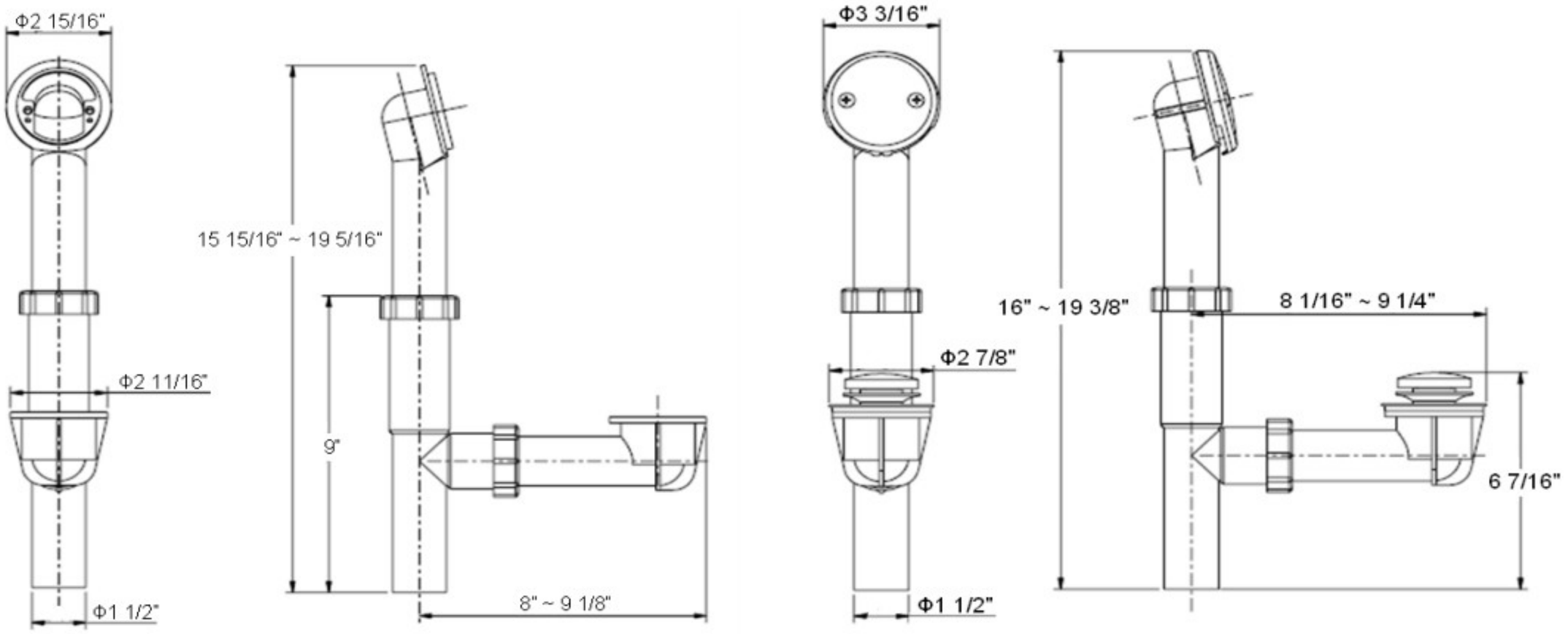

Warranty & Compliances

Warranty Lifetime Limited Warranty

Order Codes & Finishes/Colors

Satin Nickel (US15)	522706	TRU MATCH
Oil Rubbed Bronze (US10B)	522714	TRU MATCH
Polished Chrome (US26)	522813	TRU MATCH
Brushed Bronze	522722	TRU MATCH

Type:

Job:

Order Code:

Approvals:

Design House reserves the right to make changes in materials, specifications & models at any time. Design House also reserves the right to discontinue product without notice or obligation.