214866

VANITY COMBOS

Concord 2-Door 4-Drawer Vanity with Cultured Marble Single Hole Solid White Vanity Top, Fully Assembled, 61x22, White Base

FULLY ASSEMBLED VANITY

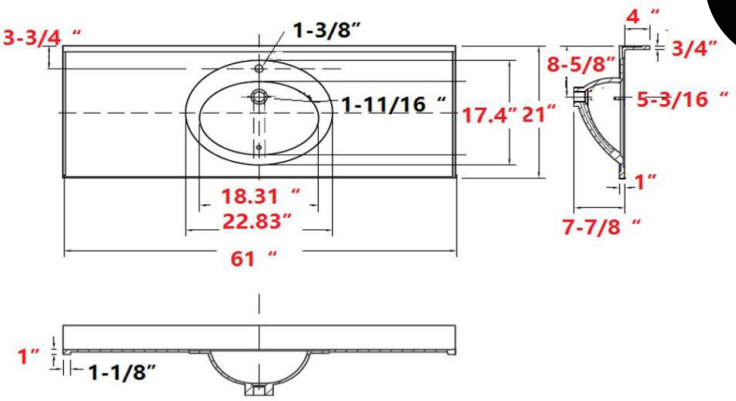

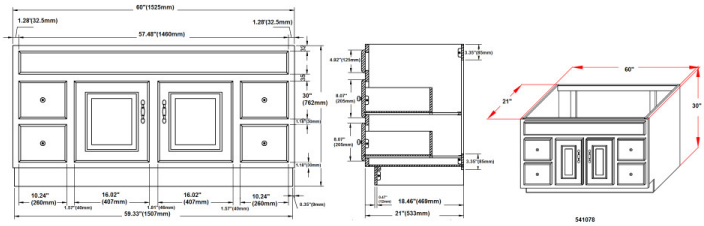

SPECIFICATIONS

MATERIAL CONSTRUCTION:	Wood/Cultured Marble
ASSEMBLY REQUIRED:	No
ASSEMBLED DIMENSIONS:	34.9" H x 61" L x 22" D
ASSEMBLED WEIGHT:	180.45 lbs.
TOOLS NEEDED FOR INSTALLATION:	100% Silicone
CONSTRUCTION TYPE:	Face Frame
HINGE STYLE:	Soft Close
DOOR STYLE:	Shaker
DRAWER STYLE:	4 MDF Drawers
GLIDE STYLE:	STD Easy Glide
FAKE DWR STYLE:	MDF
DWR #1 DIMENSIONS:	8.2" H x 14.5" L x 10.2" D
DWR CONSTRUCTION:	Standard
FACE FRAME MATERIAL:	Pine
SIDES MATERIAL:	MDF
BOTTOM MATERIAL:	MDF
TOE KICK INSET WIDTH:	2.2"
BACK PANEL MATERIAL:	MDF
BACK BRACE MATERIAL:	N/A
FAUCET TYPE:	Lav Single Handle
NUMBER OF MOUNTING HOLES:	1
BOWL MATERIAL:	Cultured Marble
BACK SPLASH INCLUDED:	Yes
COLOR:	Solid White
NUMBER OF BOWLS:	1
BOWL DIMENSIONS:	5.63" H x 11.625" W x 16.875" D
BOWL SHAPE:	Oval
SINK THICKNESS:	1"
MOUNTING TYPE:	Single Hole
OVERFLOW HOLE:	Yes
WARRANTY:	1-Year limited warranty
UPC CERTIFICATION NAME:	cUPC
LEGAL FOR SALE IN CALIFORNIA:	Yes
TSCA TITLE IV COMPLIANT:	Yes

TYPE:
JOB:
ORDER CODE:
APPROVALS:

7/30/2019

Design House reserves the right to make changes in materials, specifications & models at any time. Design House also reserves the right to discontinue product without notice or obligation.