592774

VANITY COMBOS

White

Concord 2-Door 4-Drawer Vanity with Cultured Marble Single Hole Solid White Vanity Top, Unassembled, 61x22

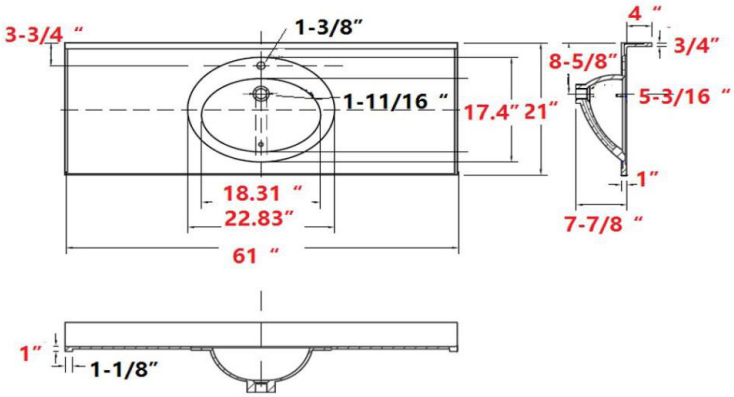

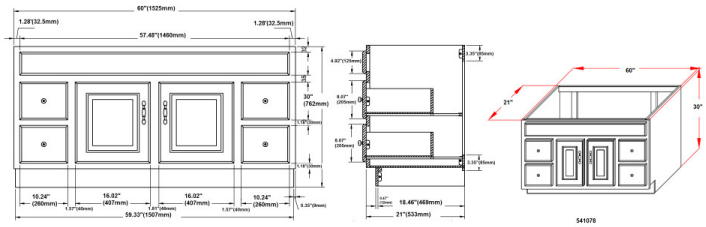

SPECIFICATIONS

MATERIAL CONSTRUCTION:	Wood/Cultured Marble
ASSEMBLY REQUIRED:	Yes
ASSEMBLED DIMENSIONS:	34" H x 61" L x 22" D
ASSEMBLED WEIGHT:	152.42 lbs.
TOOLS NEEDED FOR INSTALLATION:	Screwdriver
CONSTRUCTION TYPE:	Face Frame
HINGE STYLE:	Concealed
DOOR STYLE:	2 MDF Slab Doors
DRAWER STYLE:	4 MDF Drawers
GLIDE STYLE:	STD Easy Glide
FAKE DWR STYLE:	MDF
DWR #1 DIMENSIONS:	5.71" H x 14.25" W
DWR CONSTRUCTION:	Standard
SHELF STYLE:	N/A
SHELF ADJUSTABILITY INCREMENTS:	N/A
SHELF MAX WEIGHT CAPACITY:	N/A
SHELF DIMENSIONS:	N/A
SHELF THICKNESS:	N/A
SHELF MATERIAL:	N/A
FRAME STYLE:	N/A
FACE FRAME MATERIAL:	Pine
SIDES MATERIAL:	Plywood
BOTTOM MATERIAL:	Plywood
TOE KICK INSET WIDTH:	4"
BACK PANEL MATERIAL:	N/A
BACK BRACE MATERIAL:	Plywood
FAUCET TYPE:	Lav Single Handle
NUMBER OF MOUNTING HOLES:	1
BOWL MATERIAL:	Cultured Marble
BACK SPLASH INCLUDED:	Yes
COLOR:	Solid White
NUMBER OF BOWLS:	1
BOWL DIMENSIONS:	5.63" H x 11.63" W x 16.85" D
BOWL SHAPE:	Oval
SINK THICKNESS:	N/A
MOUNTING TYPE:	Integrated
OVERFLOW HOLE:	Yes
WARRANTY:	1-Year limited warranty
CARB COMPLIANT:	CARB Phase 2
LEGAL FOR SALE IN CALIFORNIA:	Yes
TSCA TITLE IV COMPLIANT:	Yes

TYPE:
JOB:
ORDER CODE:
APPROVALS:

7/30/2019

Design House reserves the right to make changes in materials, specifications & models at any time. Design House also reserves the right to discontinue product without notice or obligation.