548255

BATHROOM FAUCETS

Eastport Centerset Bathroom Faucet

Polished Chrome

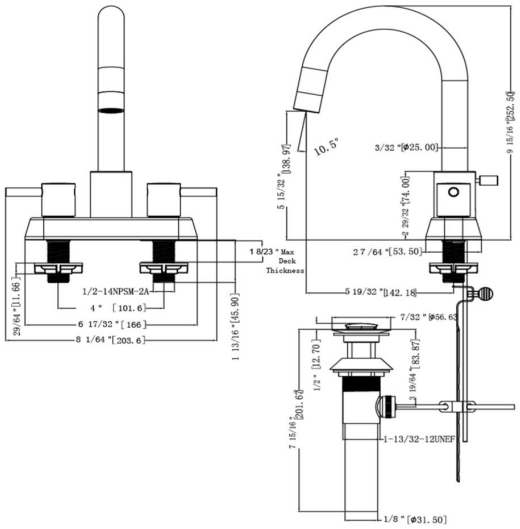

SPECIFICATIONS

MATERIAL:	Brass	FLOW RATE:	1.2 GPM
HANDLE MATERIAL:	Zinc	LOW FLOW:	Yes
SPOUT MATERIAL:	N/A	HANDLES - CONFIGURATION:	Double Handle
CARTRIDGE MATERIAL:	Ceramic	HANDLE REACH:	N/A
WATERWAY MATERIAL:	Brass	SPRAYER INCLUDED:	No
DRAIN MATERIAL:	N/A	DIMENSIONS WITH DECK PLATE:	N/A
FAUCET TYPE:	Lav Single Handle	WEIGHT WITH DECK PLATE:	N/A
MOUNTING TYPE:	Deck Mount	DIMENSIONS W/O DECK PLATE:	N/A
MOUNTING HOLES:	2	WEIGHT W/O DECK PLATE:	N/A
MAX DECK THICKNESS:	N/A	PVD FINISH:	No
DECK PLATE - INCLUDED:	N/A		
SPOUT REACH:	N/A		
SPOUT HEIGHT:	N/A		

WARRANTY:	5-Year limited warranty
UPC CERTIFICATION NAME:	cUPC
ANSI CERTIFICATION:	NSF/ANSI 61
WATERSENSE:	No
ASME:	No
AB-1953 LEAD FREE:	Yes
ADA COMPLIANT:	Yes

LIMITED 5 YEAR WARRANTY

NSF/ANSI 61-9 UPC C

LEAD-FREE

ADA COMPLIANT

TYPE:
JOB:
ORDER CODE:
APPROVALS:

Design House reserves the right to make changes in materials, specifications & models at any time. Design House also reserves the right to discontinue product without notice or obligation.

7/18/2019