ESCUTCHEON, HANDLE AND SHOWER HEAD INSTALLTION
ISTALL THE ESCUTCHEON ONTOM THE VLVE BODY USING THE ESCUCTEON SCREWS, TIGHTEN UNTIL THE ESCUTCHEON IS SNUG TO THE FINISHED WALL SURFACE.

PLACE THE HANDLE ONTO THE VALVE BODY AND SECURE IT WITH SCREWS.
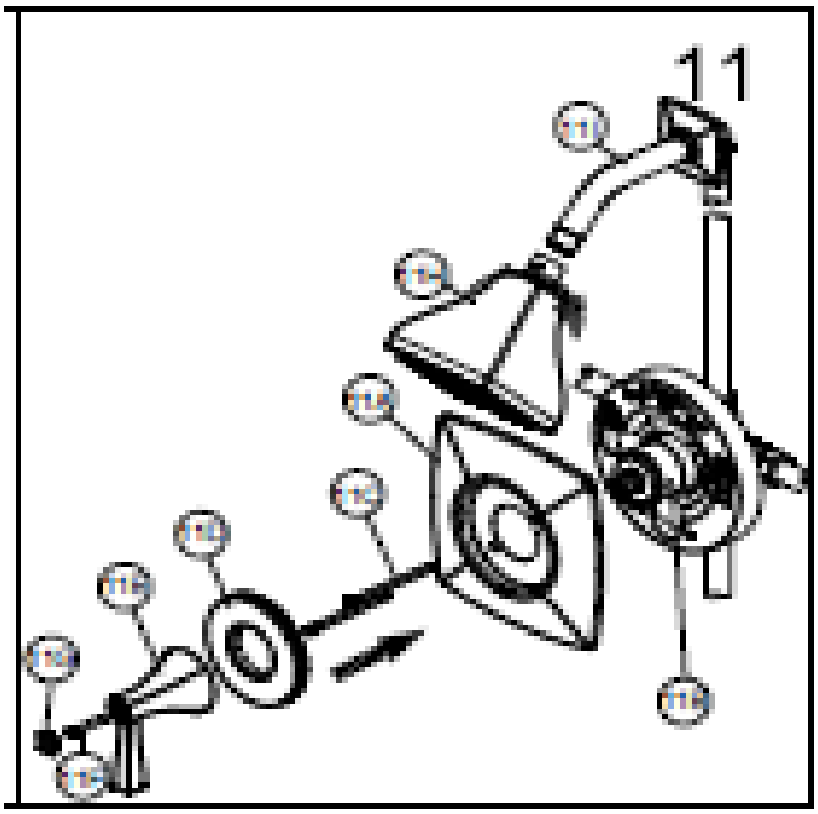
THREAD THE SHOWER HEAD TO THE SHOWER ARM, BE SURE TO WRAP ALL THREADS USING TEFLON TAPE.