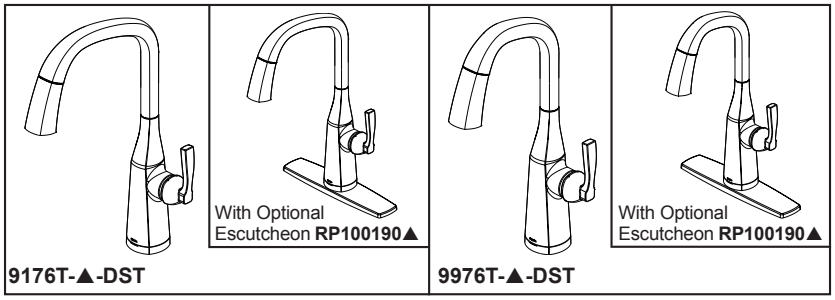

see what Delta can do℠

KITCHEN FAUCETS

- Stryke® Collection
- Single Handle Pull-Down

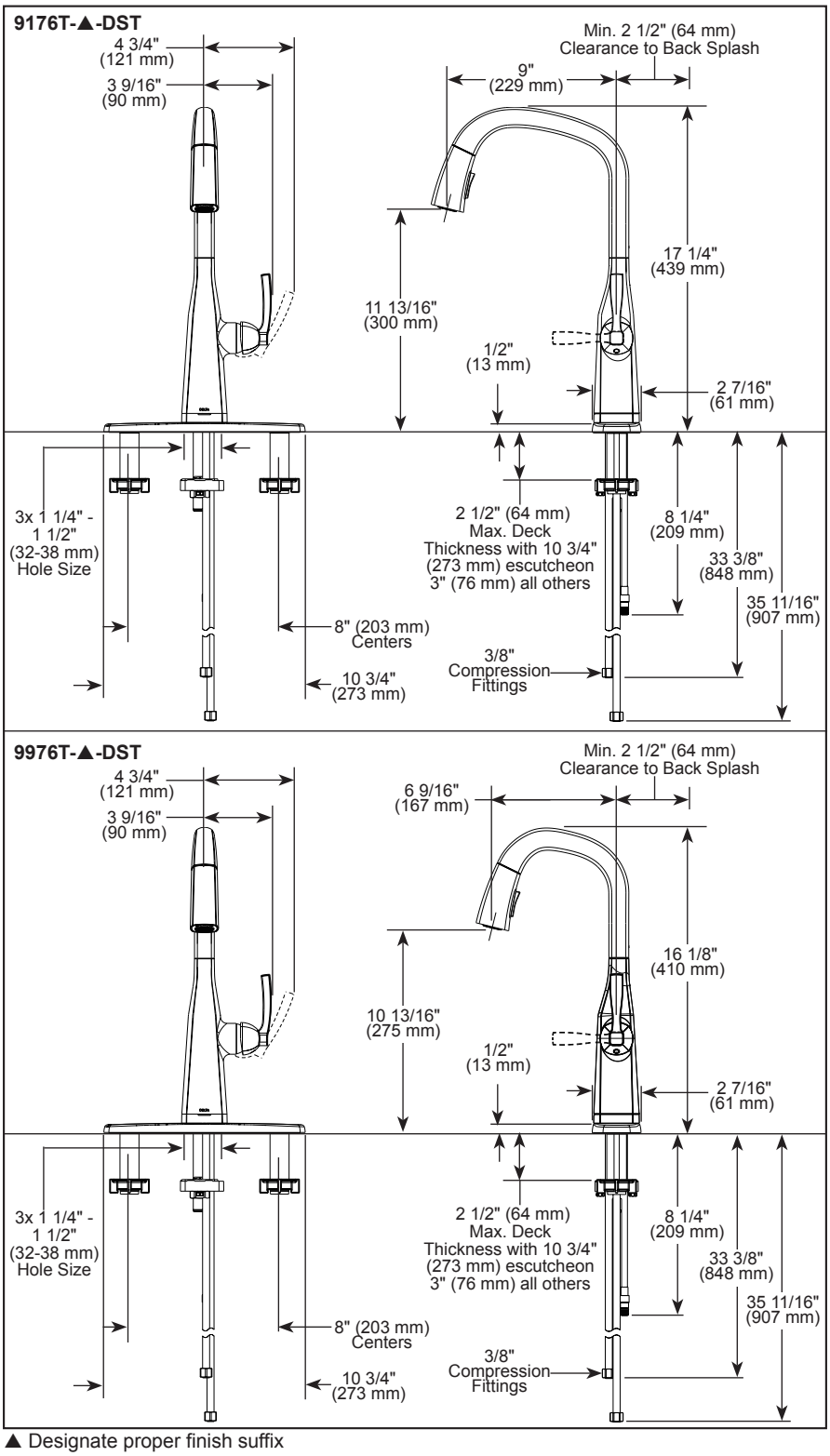

▲ Designate proper finish suffix

FEATURES:

- Touch$_2$O® Technology
- DIAMOND Seal® Technology
- Touch-Clean® Spray Holes
- MagnaTite® Docking System
- Lumicoat® Finish (metallic finishes only)

STANDARD SPECIFICATIONS:

- Max flow rate 1.8 gpm @ 60 psi, 6.8 L/min @ 414 kPa
- One or three hole mount (escutcheon not included, order separately)
- Diamond coated ceramic cartridge
- 3/8" O.D. straight, staggered PEX supply lines
- Spout rotates 360°
- Hot/cold indicator markings
- Dual integral check valves in sprayer assembly
- Two-function wand; Aerated stream or spray
- LED indicator light signals on-off, water temperature and low batteries
- RP102157 Optional 120V AC adapter available (3 prong grounded outlet required)
- Uses 6 AA (included) or 6 C (not included) batteries

WARRANTY

- Parts and Finish - Lifetime limited warranty; or for commercial purchasers, 10 years for multi-family residential (apartments and condominiums) and 5 years for all other commercial uses, in each case from the date the product is received by the original purchaser or their authorized representative (installation contractor, etc.).
- Electronic Parts and Batteries (if applicable) - 5 years from the date the product is received by the original purchaser or their authorized representative (installation contractor, etc.); or for commercial purchasers, 1 year from the date the product is received by the original purchaser or their authorized representative (installation contractor, etc.). No warranty is provided on batteries.
- Please go to www.deltafaucet.com for the complete details of our limited warranty.

COMPLIES WITH:

- ASME A112.18.1/ CSA B125.1
- ♿ ICC/ANSI A117.1- Valve control only

Delta Faucet Company reserves the right (1) to make changes in specifications and materials, and (2) to change or discontinue models, both without notice or obligation. Dimensions are for reference only. See current full-line price book or www.deltafaucet.com for finish options and product availability.

DSP-K-9176T-DST Rev. D

Delta Faucet Company
55 E. 111th Street, Carmel, IN 46280
350 South Edgeware Road, St. Thomas, ON N5P 4L1
© 2024 Delta Faucet Company