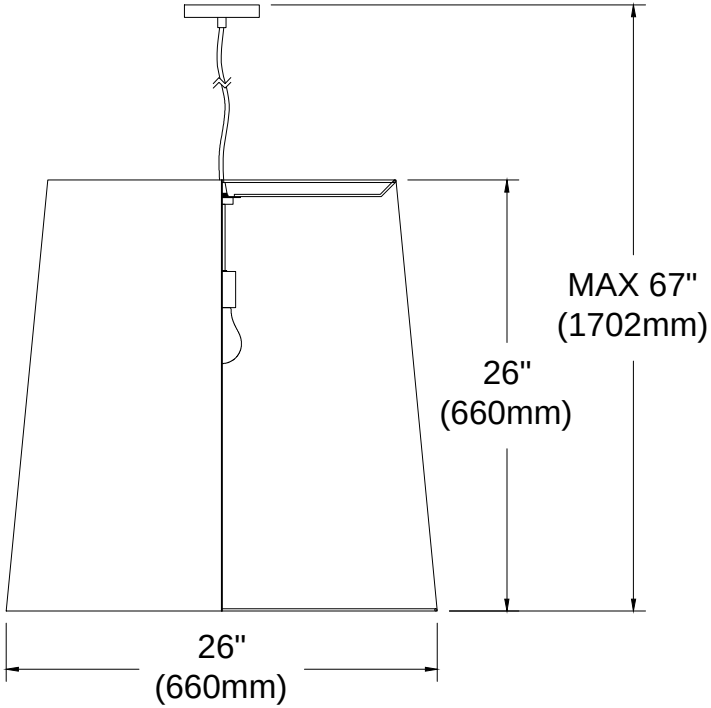OD-L