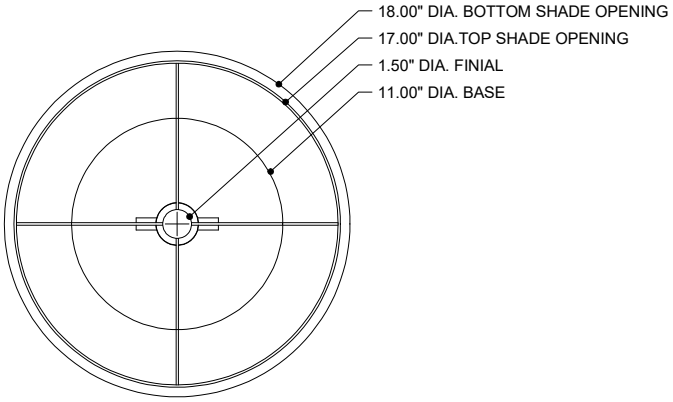

TOP VIEW

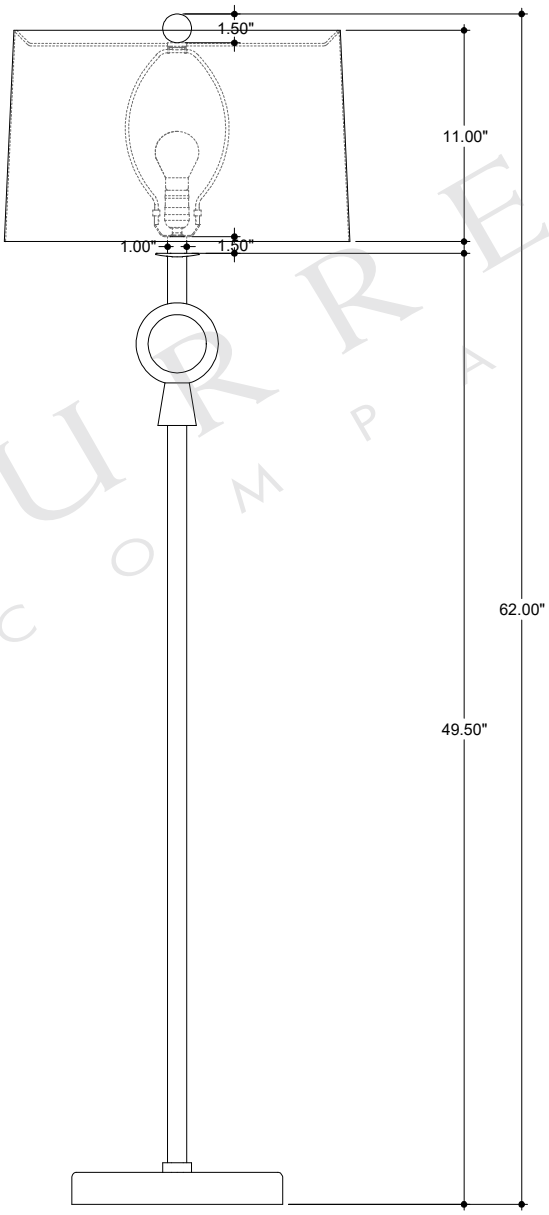

FRONT VIEW

8000-0077

ALL WORK © 2019 CURREY & COMPANY