ROUGHING IN DIMENSIONS MAY VARY AND ARE SUBJECT TO CHANGE. NO RESPONSIBILITY IS ASSUMED FOR USE OF SUPERCEDED OR VOIDED DATA.

CHICAGO FAUCETS®
a Geberit company
2100 South Clearwater Drive
Des Plaines, IL 60018
Phone: 847-803-5000
Fax: 847-803-5454
www.chicagofaucets.com

FOR TECHNICAL ASSISTANCE
1-800-TEC-TRUE (1-800-832-8783)

ROUGH-IN		FITTING NO.
		932-VBE7WSCP
BY: SID	DATE: 10-31-07	SUBMITTED MODEL NO.
CHK:	REV:	

SUBMITTED AS SHOWN		SUBMITTED AS NOTED		SEE ATTACHED FOR SUBMITTED MODIFICATION	

JOB NAME	ITEM NO.

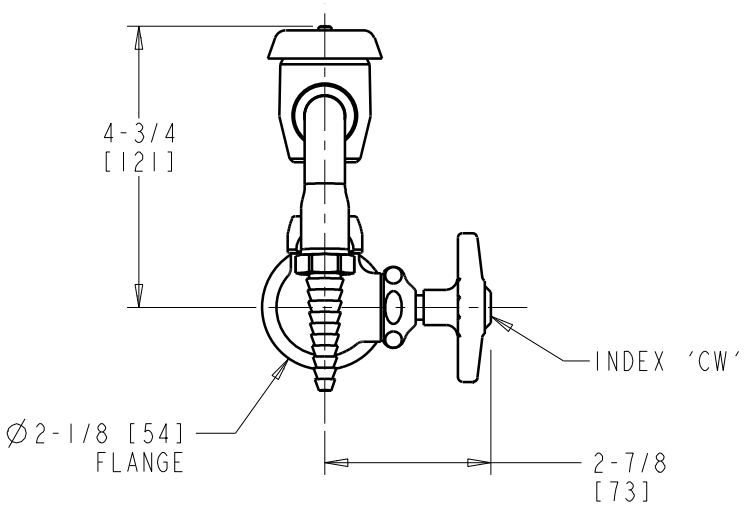

FRONT VIEW

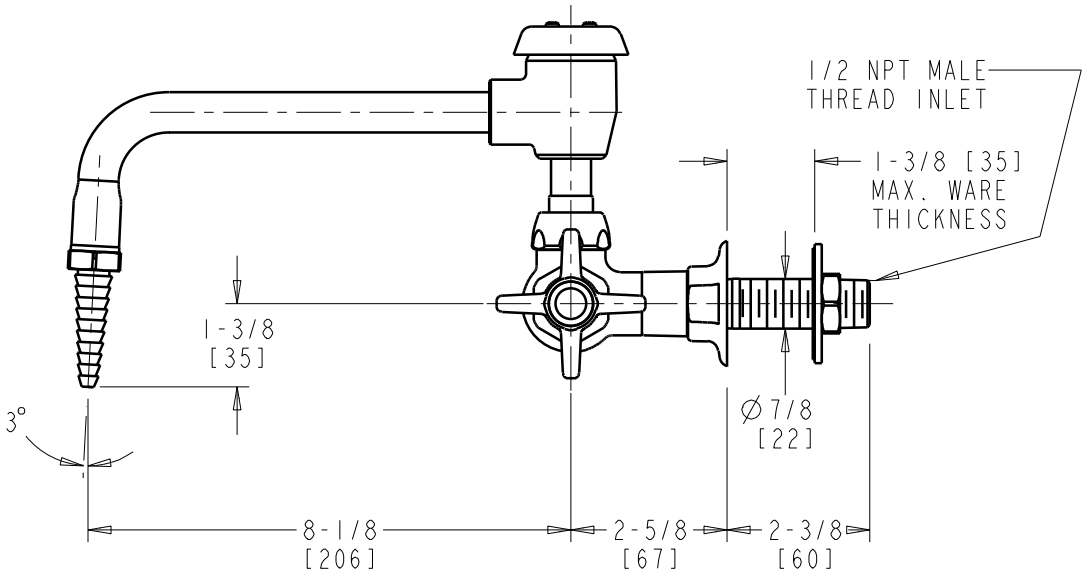

SIDE VIEW

DIMENSIONS ARE IN INCHES AND [MILLIMETERS].

TECHNICAL DATA

- WALL MOUNTED SINGLE LABORATORY FITTING
- L8BVB VACUUM BREAKER SWING SPOUT
- 204 INDEXED 4-ARM HANDLE
- SLO-COMPRESSION OPERATING CARTRIDGE
- 932-001K INLET SHANK ASSEMBLY
- FINISH: CHROME PLATE
- E7 REMOVABLE SERRATED NOZZLE OUTLET
- ASME A112.18.1/CSA B125.1 COMPLIANT
- ASSE 1001 COMPLIANT