Central Brass
COMPANY

SPECIFICATION SHEET

0122-ELS19
Central Brass Series

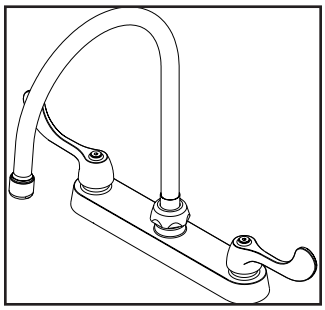

Two Handle Cast Brass Kitchen Faucet

- 8-1/16” Reach Gooseneck Rigid/Swivel Spout
- 2-Hole 8” Installation
- 1.5 GPM Flow Rate

Code and Standards

- ADA: Compliance to ICC/ANSI A117.1 (Lever Handle Only)

*For other finishes and flow rates offered, please visit our website, email an inquiry to sales@pioneerind.com or contact our sales at 800-338-9468

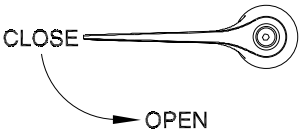

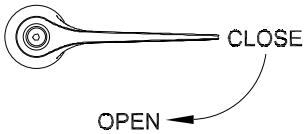

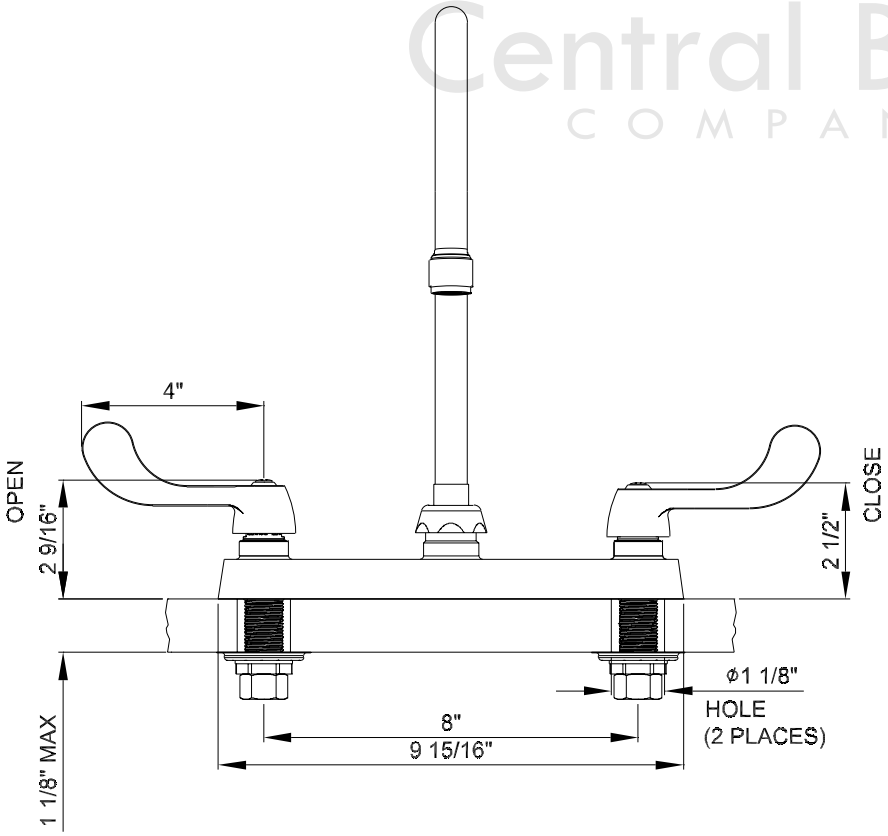

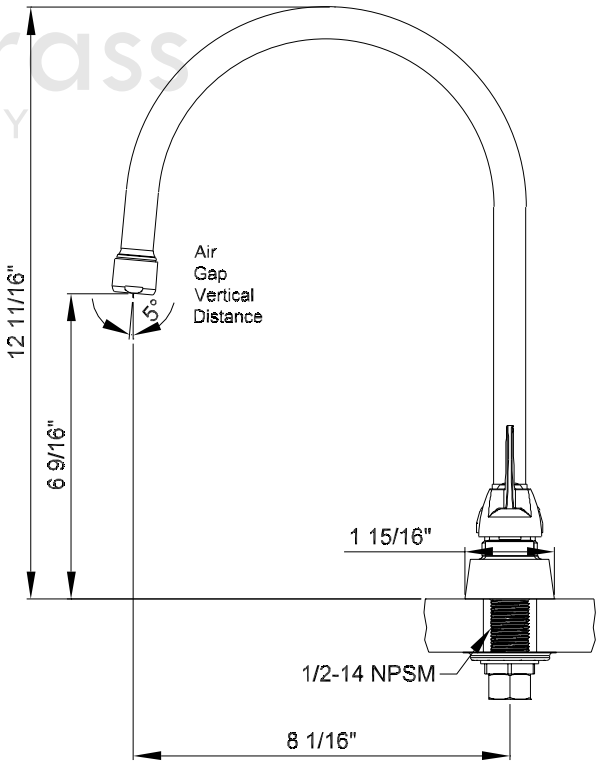

Central Brass
COMPANY