California Faucets®

San Elijo™

Contemporary Single Hole Floor Mount Tub Filler With Handshower

0811-XX.20
0811-XX.18

Features

- *25+ artisan finishes including 12 PVD finishes*
- *All brass construction*
- *No additional wall or trap stabilizer kit required*
- *10 gpm (37 L/min) tub filler max flow rate at 60 psi*
- *2.0 gpm (7.6 L/min) or 1.8 gpm (6.8 L/min) handshower max flow rate*
- *Ceramic mixing cartridge*
- *Handshower holder may be adjusted forward during installation*
- *Rough valve (9511) sold separately*

0811-62.FR-SN shown

Codes/Standards Applicable

Product meets or exceeds the following:

- *ASME A112.18.1/CSA B125.1*
- *CEC (1.8 gpm) / DOE (1.8 & 2.0 gpm)*
- *Commonwealth of MA*
- *EPA WaterSense handshower (2.0 gpm)*
- *ADA compliant (lever handles only)*
- *Local codes may require installation of an upstream tempering valve*

XX = Denotes handle series

Handle Series	A	B
37 37T	2-7/16" [63]	6-7/16" [163]
39, 39K, 39R, 39RI, 39H, 39P, & 39PI	7/8" [21]	5-11/16" [144]
40X	1-1/4" [32]	5-7/8" [150]
45	3" [76]	6-1/4" [159]
52	3-11/16" [94]	5-7/16" [138]
53	4-1/8" [106]	5-13/16" [148]
62	3-9/16" [91]	5-5/16" [135]
65	1-3/8" [36]	5-13/16" [147]
66	2-5/8" [66]	6-3/8" [162]
70	2-3/4" [70]	6" [152]
74	3" [76]	6-11/16" [170]
77	2-3/4" [70]	5-3/4" [147]
E3	3-15/16" [101]	5-11/16" [144]
E4	2-3/4" [70]	6-5/16" [160]
E5	3-15/16" [100]	5-5/16" [134]

Through-Hole Specifications		
Min	Recommended	Max
∅3-11/16" [94]	∅3-11/16" [94]	∅3-15/16" [100]

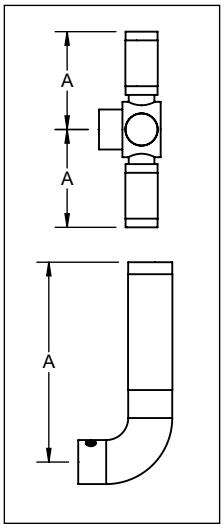

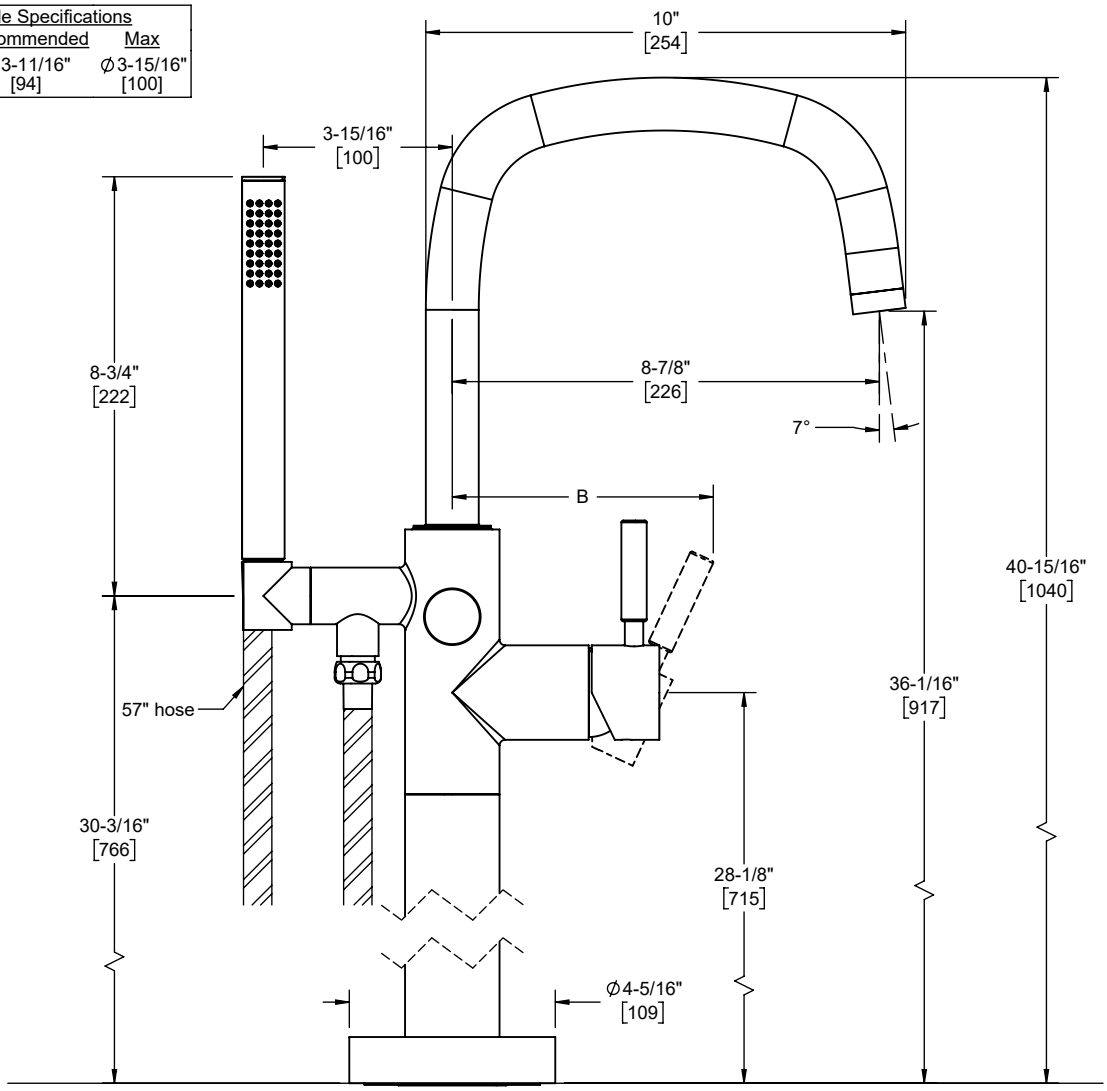

Specifications subject to change without notice

Dimensions are inches, rounded to 1/16"
[Dimensions in brackets are mm, rounded to 1mm]