California Faucets®

Spare Parts Diagram

Descanso®

Widespread Lavatory Faucet

A REQUIRES ITEM 18

3102 3102X
3102F 3102XF
3102K 3102XK

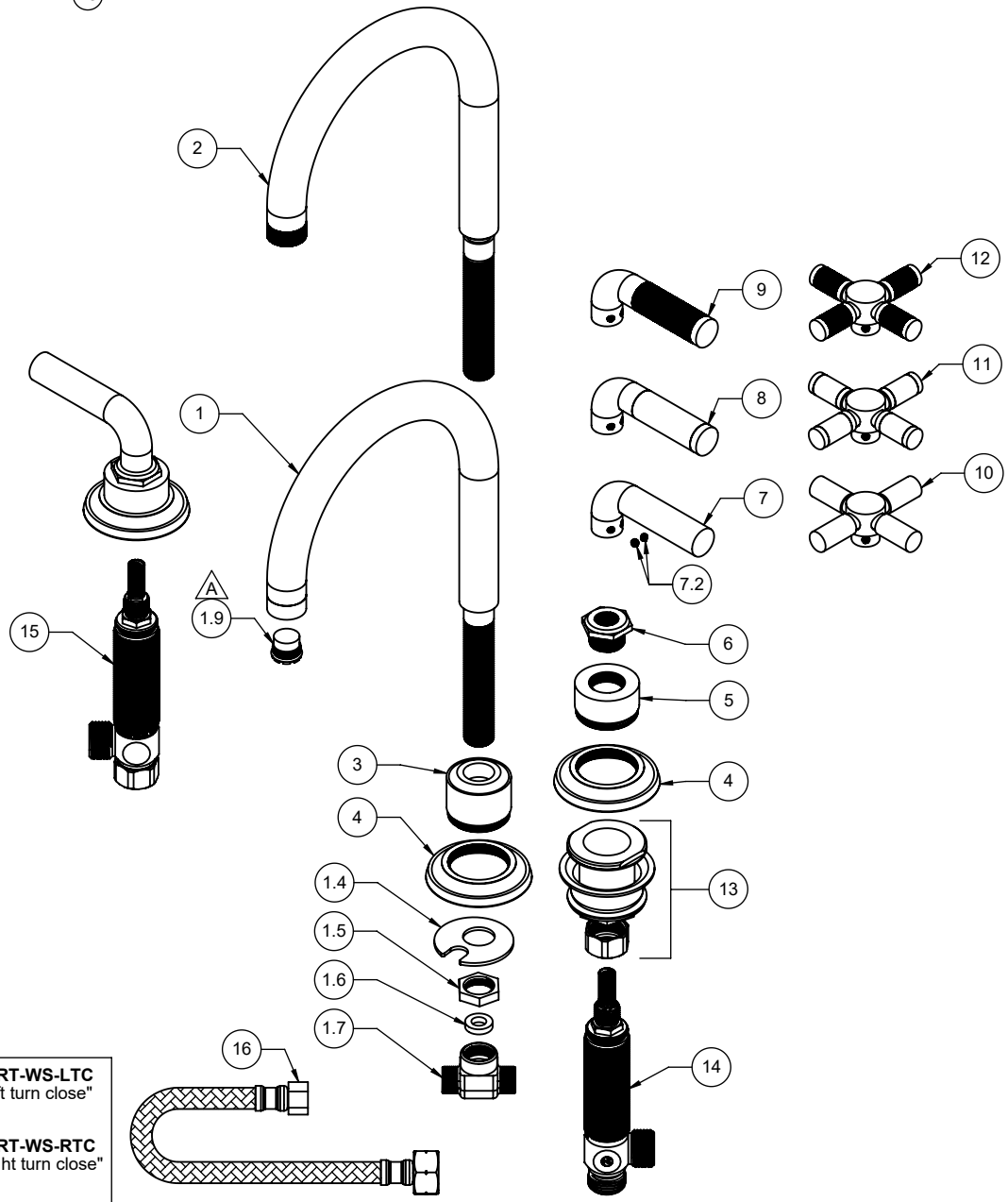

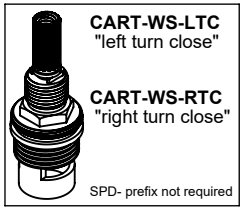

To order spare parts add and/or replace as stated below:

SPD- prefix added to part number(s)
-ZZ replaced with finish code (see finish table)
-WW replaced with **-90** (light finish) or **-96** (dark finish)

Ex: **SPD-**7-100308**-PC** or **SPD-**86030**-96**

	ITEM	PART NO.	DESCRIPTION	QTY.
for 3102 / F / X / XF	1	7-100308-ZZ	ASM, LAV SPOUT, CANE, SMOOTH *(incl. 1.4, 1.5, 1.6, 1.7, 1.9)*	1
	1.4	881766-99	WSHR HORSESHOE	1
	1.5	881276-99	NUT, HEX 3/8"-18 NPSM X .20 HT	1
	1.6	87162-80	WSHR Ø8.5 X Ø15.5 X 3.5MM EPDM A70 (NSF-61-12 & WRAS)	1
	1.7	880083-90	TEE, 3-WAY LAV - SS	1
	1.9	880356-81	INSERT, 1.2 GPM, TT LAMINAR (CACHE)	1
for 3102K / XK	2	7-100309-ZZ	ASM, LAV SPOUT, INDUSTRIAL, SMOOTH *(incl. 1.4, 1.5, 1.6, 1.7, 1.9)*	1
	3	10749-ZZ	BASE, LAV SPT, W/THRU-HOLE	1
	4	10363-ZZ	RING, BASE, TRAD	3
	5	10751-ZZ	ESCUTCHEON, SCALLOPED	2
	6	10760-ZZ	NUT, SCALLOPED ESCUTCHEON	2
for 31 series	7	7-100146-ZZ	ASM, LEVER, 74 SERIES "BROACHED" *(incl. 7.2)*	2
	7.2	86030-WW	SETSCREW 8-32 X 1/8 SCKT HD CUP PT SS	2
for 31F series	8	7-100277-ZZ	ASM, CARBON FIBER LEVER *(incl. 7.2)*	2
for 31K series	9	7-100271-ZZ	ASM, KNURLED LEVER *(incl. 7.2)*	2
for 31X series	10	7-100291-ZZ	ASM, INDUSTRIAL X-HDL SMOOTH *(incl. 7.2)*	2
for 31XF series	11	7-100292-ZZ	ASM, INDUSTRIAL X-HDL CARBON FIBER *(incl. 7.2)*	2
for 31XK series	12	7-100293-ZZ	ASM, INDUSTRIAL X-HDL KNURLED *(incl. 7.2)*	2
	13	6-200294	KIT, W/S INV NUT - 2 SETS (1 SET - 6-200294-1)	1
	14	6-200087	ASM, COLD-LAV "NL" BODY & CART (.25 Pb)-G4 *(incl. CART-WS-LTC)*	1
	15	6-200088	ASM, HOT-LAV "NL" BODY, CART (.25 Pb)-G4 *(incl. CART-WS-RTC)*	1
	16	880099-99	HOSE, POLY BRAIDED, 1/2 IPS X 3/8 CMP X 12 (DN6-SILICONE) (NL, NSF-61-12 & WRAS)	2
	18	223472-99	KEY, TT CACHE AERATOR INSERT	1
for ITEM 7.2	19	882042-99	KEY, ALLEN, 5/64", BLACK	1