California Faucets®

ASILOMAR®

CONTEMPORARY WALL MOUNT TUB FILLER WITH HANDSHOWER

1106-XX.20

Features

- *Tub filler: Max flow rate 15 gpm (60.6 L/min)at 60 psi*
- *Handshower: Max flow rate 2.0 gpm (7.6 L/min)*
- *EPA WaterSense Certified handshower*
- *1/4 turn ceramic disc cartridges*
- *Replace "XX" with desired handle series*
- *Solid brass construction*
- *Over 30 finishes including 15 PVD finishes*

Codes/Standards

Product meets or exceeds the following:

- *ASME A112.18.1/CSA B125.1*
- *CEC/ DOE*
- *EPA WaterSense*
- *Commonwealth of MA*
- *ADA compliant (with lever handles)*

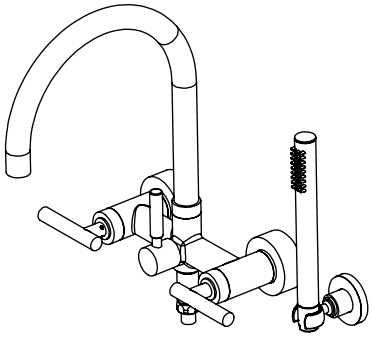

1106-66.20 SHOWN

XX = DENOTES HANDLE SERIES

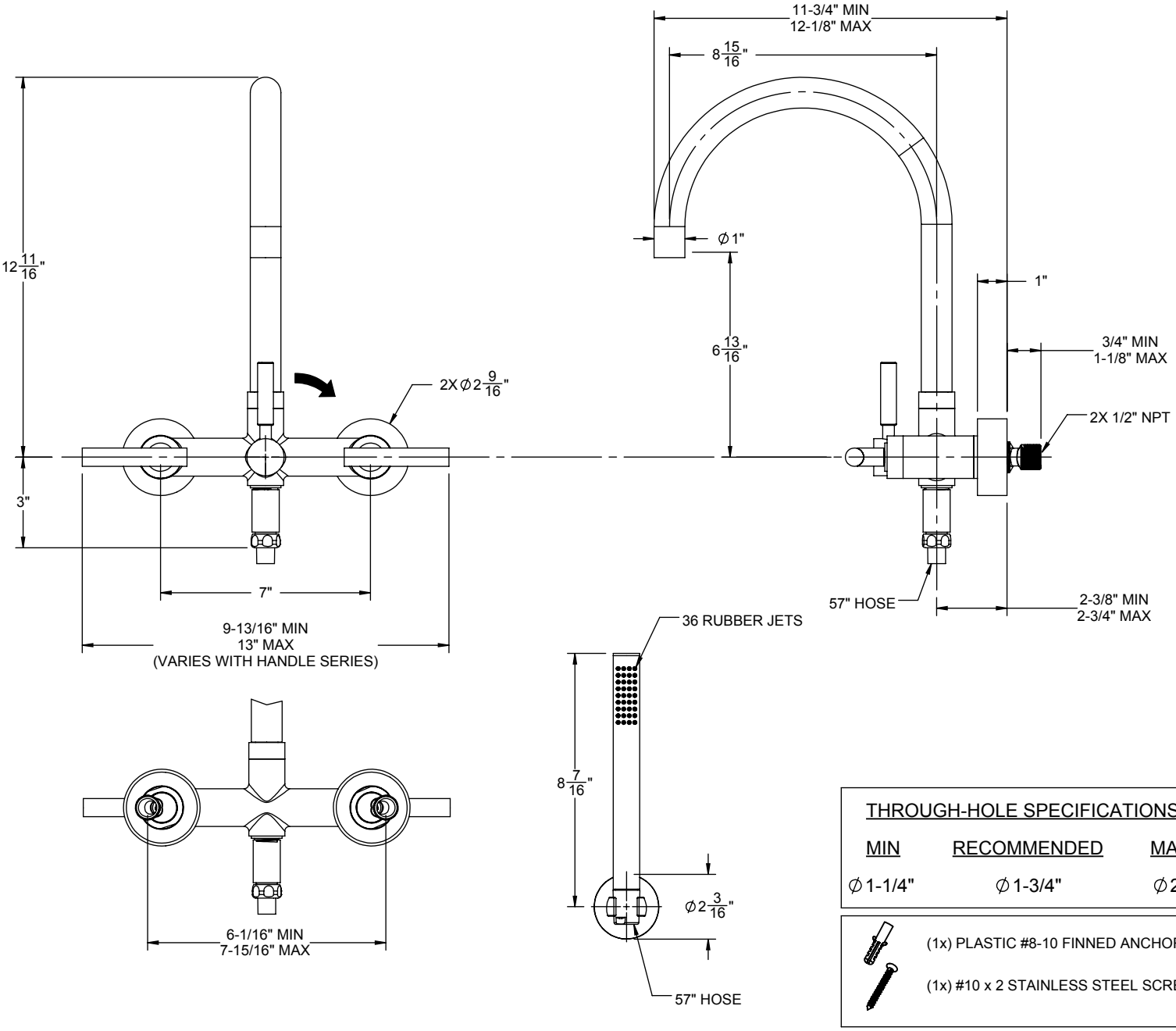

THROUGH-HOLE SPECIFICATIONS		
MIN	RECOMMENDED	MAX
∅1-1/4"	∅1-3/4"	∅2"

(1x) PLASTIC #8-10 FINNED ANCHOR

(1x) #10 x 2 STAINLESS STEEL SCREW

SPECIFICATION SUBJECT TO CHANGE WITHOUT NOTICE

ALL DIMENSIONS SHOWN TO NEAREST 1/16"