California Faucets®

KITCHEN

CONTEMPORARY HOT ONLY WATER DISPENSER

CF-9625-K50-XX

Features

- *Solid brass construction*
- *360° rotating spout*
- *Insulated body and spout to reduce heat transfer to faucet*
- *Self-closing handle*
- *Flow rate: 0.5 gpm (1.9 L/min)*
- *Over 30 finishes including 15 PVD finishes*
- *Requires separate Hot Water Tank (purchase separately)*
  Suggested options are one of the following compatible tanks:
  -Mountain Plumbing Products Little Gourmet #MT641-2
  -Brasstech/ Newport Brass #5-036
  (tank must have 1/4" compressin inlet & 3/8" compression outlet)

Codes/Standards Applicable

Meets or exceeds the following at date of manufacture:

- *ASME A112.18.1/CSA B125.1*
- *NSF 61 and NSF 372*

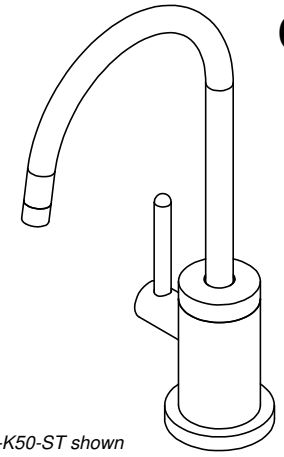

CF-9625-K50-ST shown

XX = DENOTES HANDLE STYLE

DEMENSIONS (in.)			
XX HANDLE	A	B	C
FB	$3\frac{3}{4}$	$1\frac{3}{4}$	$1\frac{13}{16}$
BFB	$3\frac{3}{4}$	$1\frac{3}{4}$	$1\frac{13}{16}$
ST	$3\frac{11}{16}$	$1\frac{11}{16}$	$1\frac{5}{8}$
BST	$3\frac{11}{16}$	$1\frac{11}{16}$	$1\frac{5}{8}$

THROUGH-HOLE SPECIFICATIONS		
MIN	RECOMENDED	MAX
∅1-1/4"	∅1-3/8"	∅1-1/2"

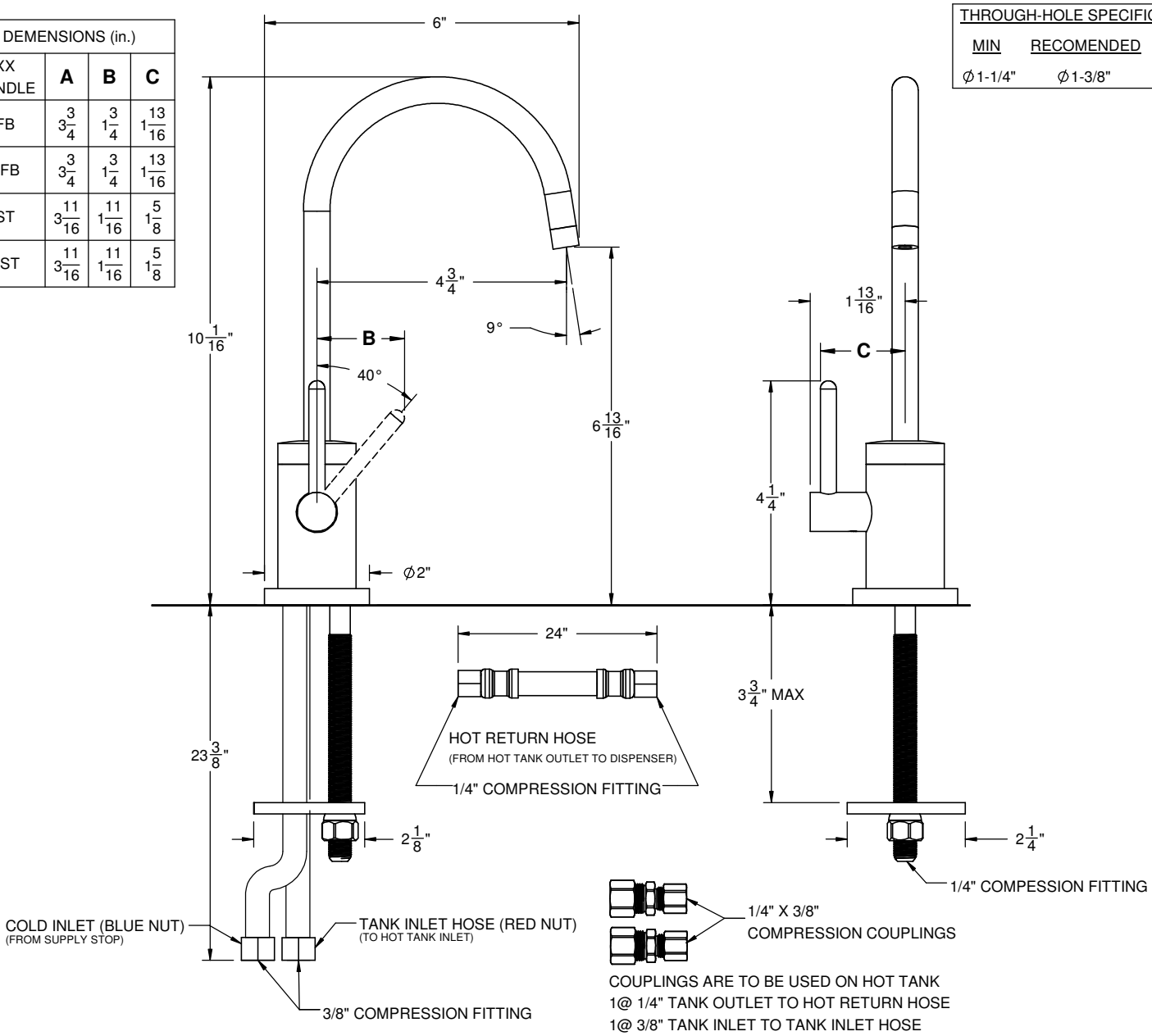

COUPLINGS ARE TO BE USED ON HOT TANK
1@ 1/4" TANK OUTLET TO HOT RETURN HOSE
1@ 3/8" TANK INLET TO TANK INLET HOSE

ALL DIMENSIONS SHOWN TO NEAREST 1/16"