# CAL LIGHTING

3625 E. Philadelphia St. Ontario CA. 91761。Tel: 909.947.5200。Fax: 909.947.5673。www.calighting.com。service@calighting.com。
Specifications subject to change without notice

Type:
Project:
Catalog No.: BO-3177FL-AB
Lamp/Wattage:

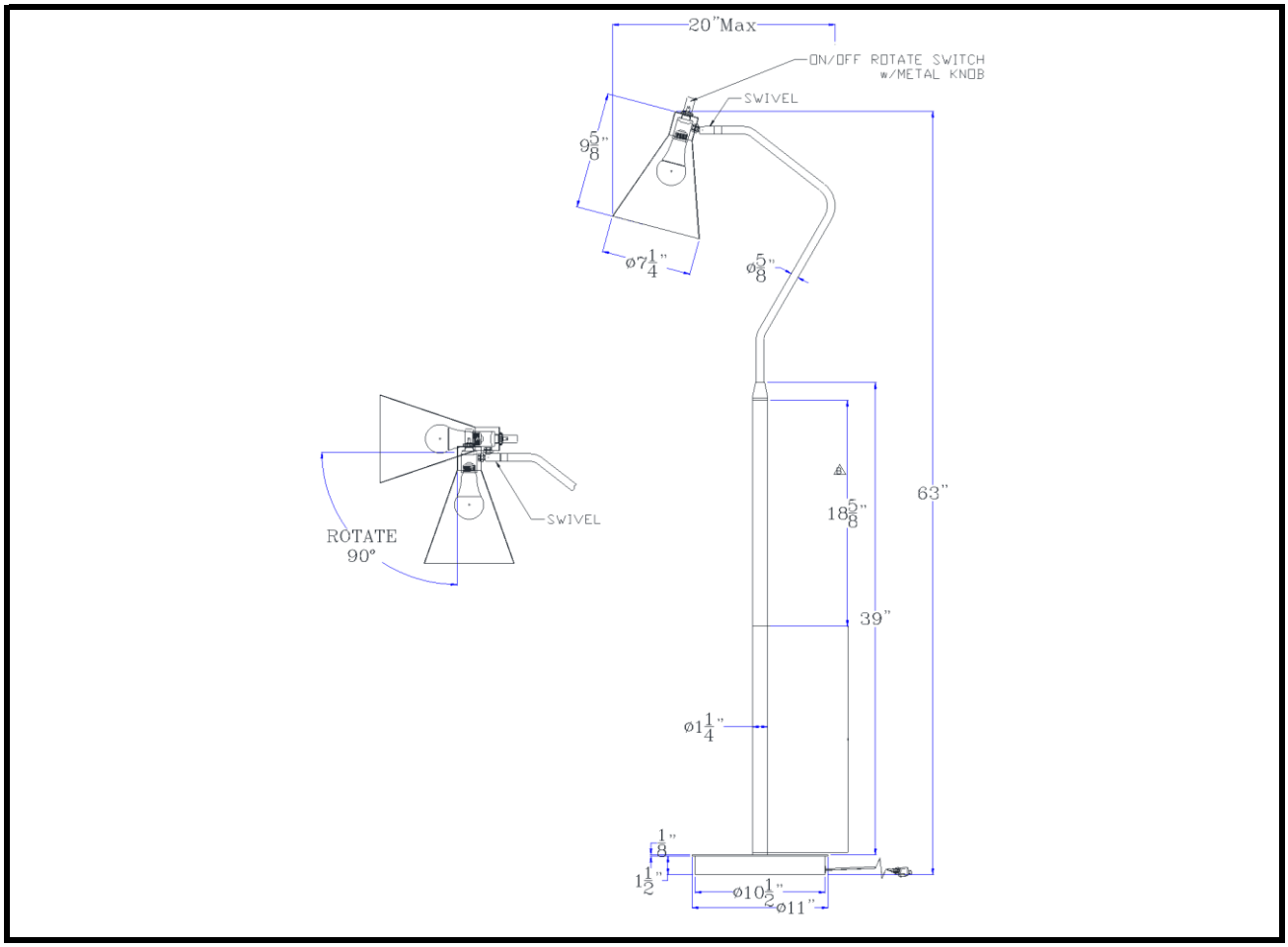


| | |
|---|---|
| **Model No:** | BO-3177FL-AB |
| **Description:** | Type A LED bulb 15W max. Capstone task metal floor lamp with swivel shade |
| **Material:** | Metal |
| **Finish :** | Antique Brass |
| **Height:** | 63" |
| **Reach/Depth:** | 20" |
| **Base Width:** | Dia.11" |
| **Wattage :** | LED 15W |
| **Socket :** | Medium Base (E26) |
| **Switch:** | On/off |
| **Bulb:** | LED |
| **Wire Length:** | 6' |
| **Wire Color:** | Gold |
| **Shade No:** | |
| **Material:** | Metal |
| **Shade size:** | Dia.7 1/4" H 9 5/8" |
| **Certificate :** | c UL us |