AVENTOS

Lift Systems

blum.com

Lifting Cabinet Doors Up and Out of the Way

AVENTOS lift systems are the premium functional hardware for upper cabinets. Doors easily lift up and out of the way, thanks to low opening forces. This allows complete access to the interior of the cabinet while not interfering with work in the kitchen. When you are done, the integrated BLUMOTION ensures AVENTOS lift system doors glide to a soft close.

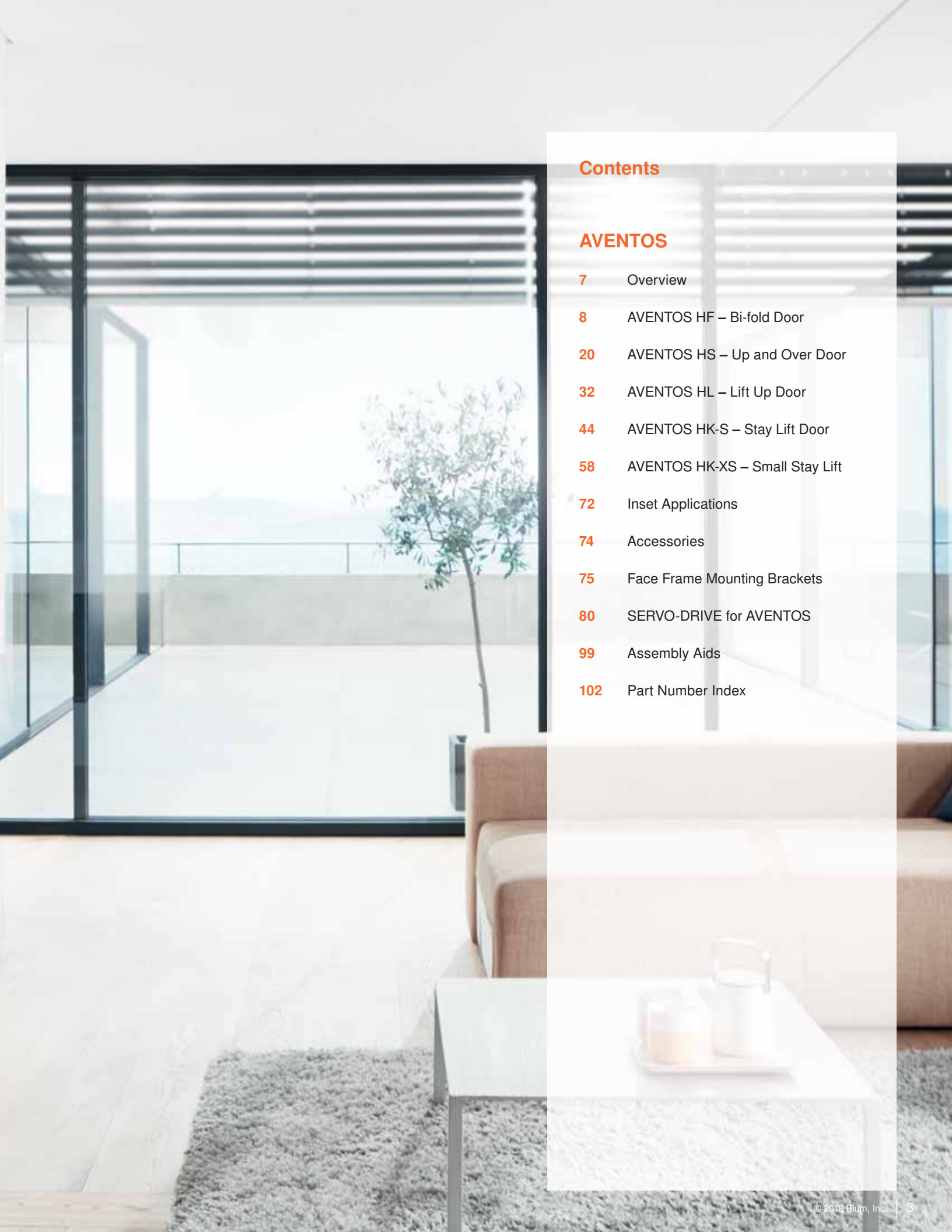

Contents

AVENTOS

Effortless Opening

A light touch on the front using your hand or elbow is all that's required to open doors with SERVO-DRIVE for AVENTOS. Even large and heavy doors open effortlessly. For the user, this means easy access to the cabinet interior.

Open with a Simple Touch

TIP-ON is an excellent solution for opening handleless doors. The mechanical opening feature allows you to simply push on the door front to open it. It's that easy.

Smooth and Silent

With AVENTOS, even heavy doors open with just a light pull of the handle and stay in any position, up and out of the way. BLUMOTION soft close is available with every AVENTOS lift system for an amazingly quiet close every time.

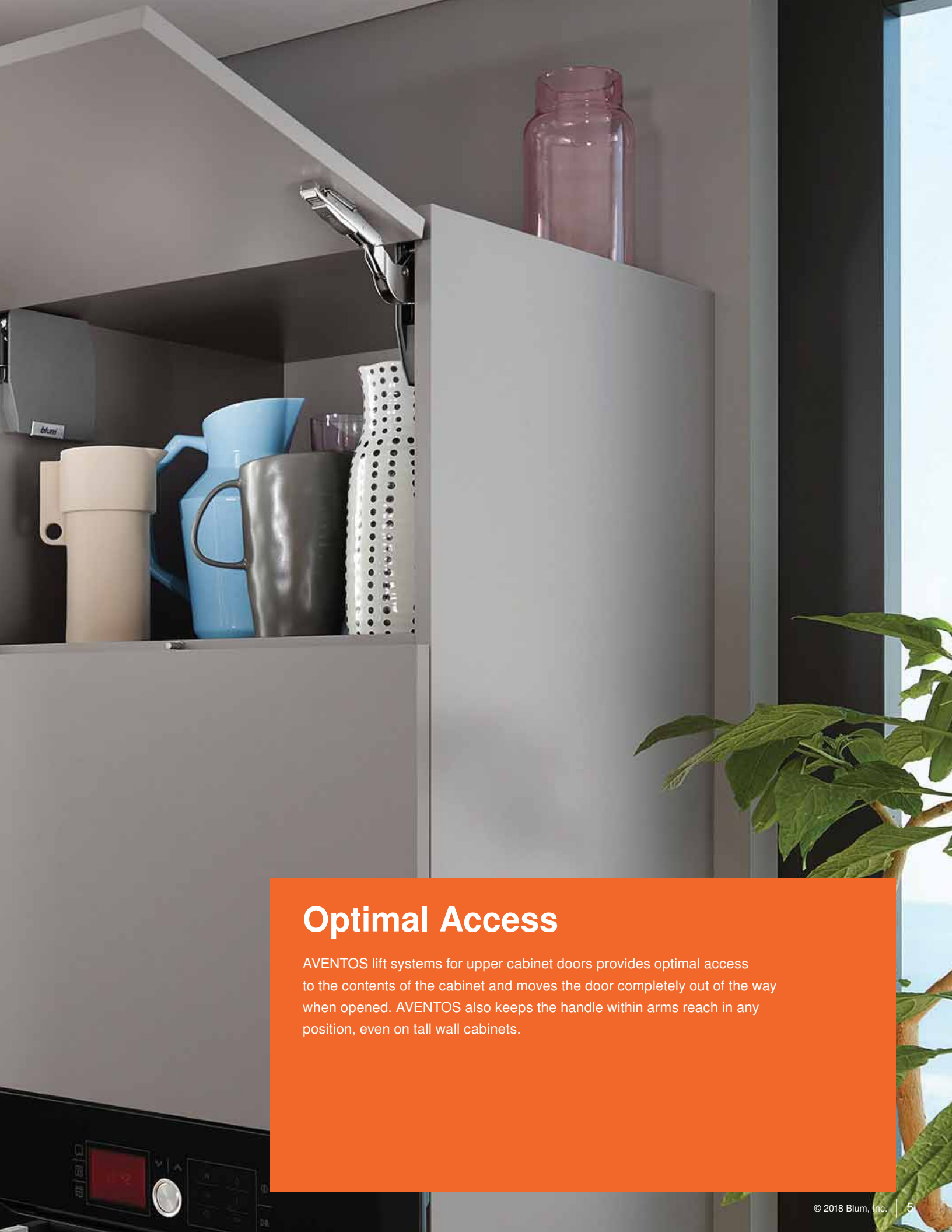

Optimal Access

AVENTOS lift systems for upper cabinet doors provides optimal access to the contents of the cabinet and moves the door completely out of the way when opened. AVENTOS also keeps the handle within arms reach in any position, even on tall wall cabinets.

There Are Many Good Reasons Why AVENTOS Lift Systems Are An Excellent Choice For Wall Cabinets.

Since the cabinet doors open upwards, AVENTOS provides an excellent view into the cabinet interior enabling comfortable and ergonomic access to storage items.

The AVENTOS program opens up a whole new world of design possibilities for kitchen and office spaces. Even the widest and heaviest doors can be accommodated. Wide base cabinet designs can now be mirrored in the wall cabinets above to create a more uniform look.

> Online Resource for Planning

Easy Planning
Blum offers many online tools to help you with your kitchen planning and ordering. Online Product Configurator (OPC) offers a parts list and planning information based on your specifications. Once complete, your results can then be exported to a shareable document.

OPC is easily accessible on our website at blum.com/configurator

AVENTOS HF		Frameless and face frame cabinet		
	**Bi-fold door** Height range **479** (18-7/8") – **1067** (42") Width range **381** (15") –**1828** (72")	Wood or wide aluminum frame door	Narrow aluminum frame door	SERVO-DRIVE
	Ordering information	page 10	page 14	
	Cabinet preparation	page 12	page 16	page 100

AVENTOS HS		Frameless and face frame cabinet		
	**Up-and-over door** Height range **350** (13-3/4") – **800** (31-1/2") Width range **381** (15") – **1828** (72")	Wood or wide aluminum frame door	Narrow aluminum frame door	SERVO-DRIVE
	Ordering information	page 22	page 26	
	Cabinet preparation	page 24	page 28	page 101

AVENTOS HL		Frameless and face frame cabinet		
	**Lift up door** Height range **300** (11-13/16") – **580** (22-13/16") Width range **381** (15") – **1828** (72")	Wood or wide aluminum frame door	Narrow aluminum frame door	SERVO-DRIVE
	Ordering information	page 34	page 38	
	Cabinet preparation	page 36	page 40	page 102

AVENTOS HK-S		Frameless and face frame cabinet		
	**Stay lift door** Height range **186** (7-3/8") – **610** (24") Width range **381** (15") – **1828** (72")	Wood or wide aluminum frame door	Narrow aluminum frame door	TIP-ON for AVENTOS
	Ordering information	page 46	page 50	page 54
	Cabinet preparation	page 48	page 52	page 55

AVENTOS HK-XS		Frameless and face frame cabinet		
	**Stay lift door** Height range **238** (9-3/8") – **610** (24") Width range **381** (15") – **1828** (72")	Wood or wide aluminum frame door	Narrow aluminum frame door	TIP-ON for AVENTOS
	Ordering information	page 60	page 64	page 68
	Cabinet preparation	page 62	page 66	page 69

NOTE: For inset applications see page 72-73

AVENTOS HF
Up and Out of The Way

AVENTOS HF has a two part front that folds together in the center when opening. The bi-fold lift system is ideal for taller wall cabinets with large fronts because the handle remains within reach.

Includes a Finger Safety Feature

The CLIP top bottom door hinge has an innovative "release" feature that ensures finger safety.

Easy Installation and Adjustment

The three-dimensional adjustment feature enables doors to be precisely aligned during installation and tolerances to be maintained with ease.

The Motion Inside

The amount of technology and components placed into each lift mechanism are what provide the unparalleled smooth operation of AVENTOS.

AVENTOS

AVENTOS HF Ordering Information for Frameless and Face Frame

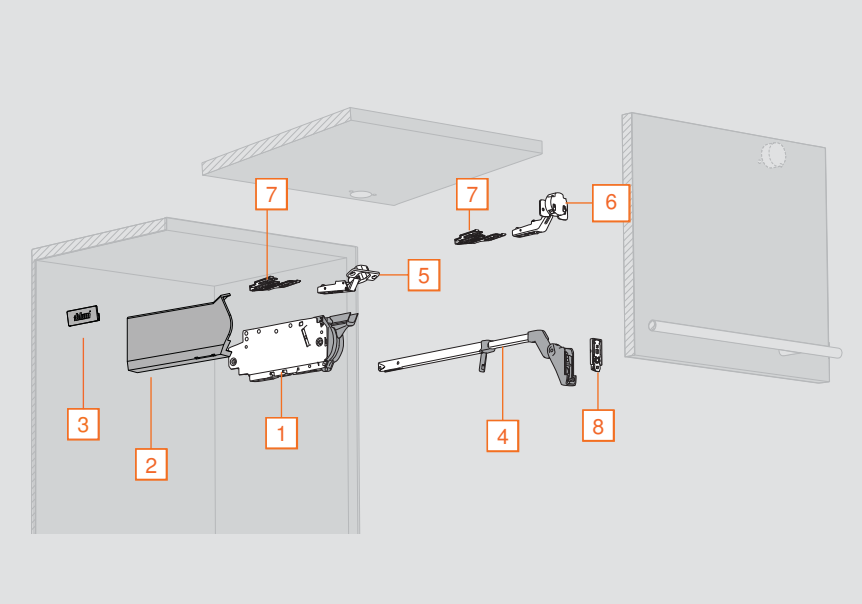

- Well suited for large cabinets
- For both frameless and face frame applications
- Cabinet height from **479** (18-7/8") to **1067** (42")
- Cabinet width from **381** (15") to **1828** (72")
- Interior depth minimum **278** (10-15/16")
- Center hinge with finger safety feature
- Three-dimensional front adjustment of both fronts
- Closes silently and effortlessly with BLUMOTION
- Variable stop
- Optional: SERVO-DRIVE for AVENTOS

Warning: Risk of injury by spring-loaded lever arm!

- Do not push lever arm down
- Secure lever arm before installing cabinet

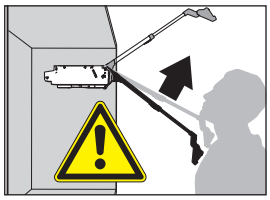

Step 1 – Determine the Power Factor for the Application

Power factor = cabinet height (inch) x combined door weight* (lb)

Determine power factor

To select the correct lift mechanism for a given application, the power factor must first be calculated by using the formula below.
Use the table at the bottom of the page to convert ounces into decimal form for easy calculation.

Power factor = cabinet height multiplied by combined door weight*

Example:
Cabinet height: 30" (within possible range)
Combined door weight = 23 lb 14 oz (14 oz = .9 lb see chart below)

Power factor = 30 x 23.9
Power factor = 717

A power factor of 717 requires lift mechanism 20F2500.N5

*Including handle weight

NOTE: AVENTOS planning tools available at blum.com/configurator

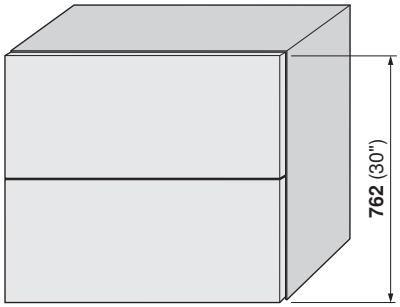

Combined door weight* = **23** lb 14 oz

Weight conversion chart															
oz	1	2	3	4	5	6	7	8	9	10	11	12	13	14	15
lb	.1	.1	.2	.3	.3	.4	.4	.5	.6	.6	.7	.8	.8	.9	.9

Step 2 – Select the Required Components

Lift mechanism set

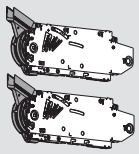

Set includes:

1 Lift mechanism (qty 2)

- #7 x **35** (1-3/8") wood screw (qty 8)

NOTE: It is recommended to use the more powerful lift mechanism for overlapping areas

Power factor range	Part no.
85 – 230 (one lift mechanism required)	20F2200.N5
231 – 470	20F2200.N5
471 – 880	20F2500.N5
881 – 1440	20F2800.N5
1441 – 2300 (three lift mechanisms required)	20F2800.N5

Cover set

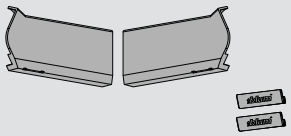

Set includes:

2 Right and left cover plate

3 Non-handed cover cap (qty 2)

NOTE: Light Gray, Dark Gray and Silk White options available

- Light Gray (HGIG)
- Dark Gray (TGIG)
- Silk White (SWIG)

	Part no.
Cover set	20F8020.NA

Telescopic arm set

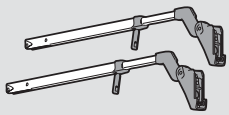

Set includes:

4 Telescopic arm (qty 2)

NOTE: One telescopic arm is required per lift mechanism

Cabinet height range	Part no.
479 (18-7/8") – **558** (22")	20F3200.01
558 (22") – **686** (27")	20F3500.01
686 (27") – **889** (35")	20F3800.01
889 (35") – **1067** (42")	20F3900.01

Wood or wide aluminum door hardware set

Set includes:

5 70T5580.TL – CLIP top 120° free swing hinge (qty 2)

5 32.4630 – COMPACT 33 free swing hinge (qty 2)

6 78Z5530T – CLIP top bottom door hinge (qty 2)

7 130.1130.02 – COMPACT mounting plate, 1-1/4" Overlay (qty 2)

7 175H6000 – Face frame adapter (qty 4)

8 175H3100 – Telescopic arm mounting plate (qty 2)

NOTE: Three hinges and mounting plates are required for cabinet widths over **1219** (48") or combined door weight of 26.5 lb

	Part no.
Wood or wide aluminum hardware set	78Z5530TA8
Installation screw for wood doors	606N or 606P
Installation screw for wide aluminum doors	7072A

Mounting plate with bracket set

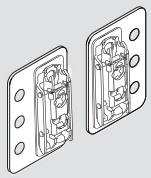

Set includes:

- Right and left mounting plate with bracket

For use with large overlay five-piece doors

	Part no.
Mounting plate with bracket set	175H3F00

SERVO-DRIVE for AVENTOS available, see page 82 for more information

AVENTOS

AVENTOS HF Planning Specifications for Frameless and Face Frame

Frameless Application

Door and hardware clearance

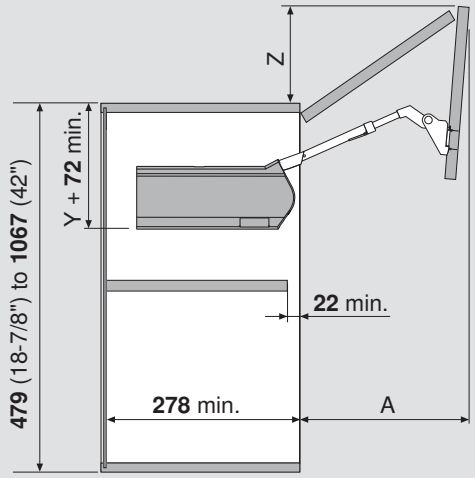

Y = See table below
Z = Top door height x .44 + **38**
A = Top door height x .9 + (1.5 x bottom door thickness)

Bore for the locating pins

TR = Top reveal
TDH = Top door height

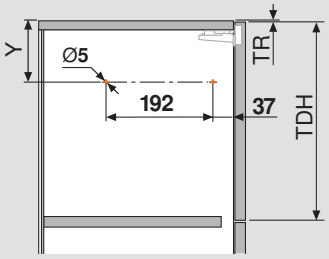

NOTE: Locating pin holes shown in orange

TDH	Y
231 – 271	TDH x .6 minus **28** + TR
272 – 531	TDH x .6 minus **57** + TR

Face Frame Application

Door and hardware clearance

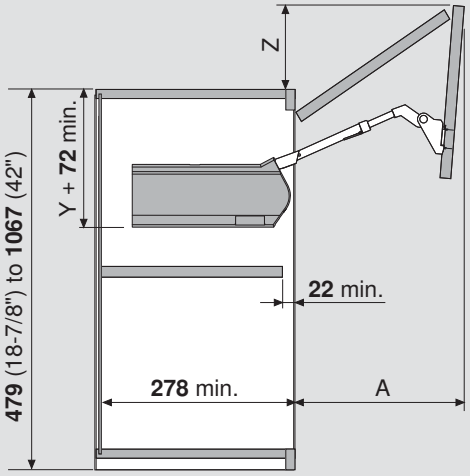

Y = See table below
Z = Top door height x .44 + **38**
A = Top door height x .9 + (1.5 x bottom door thickness)

Bore for the locating pins

TR = Top reveal
TDH = Top door height

See page 89 for optional face frame mounting bracket or block-out side flush with frame.

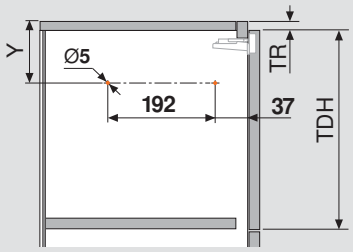

NOTE: Locating pin holes shown in orange

TDH	Y
231 – 271	TDH x .6 minus **28** + TR
272 – 531	TDH x .6 minus **57** + TR

Lift mechanism clearance

*Clearance required for SERVO-DRIVE

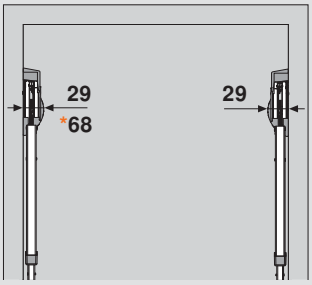

Lift mechanism positioning

Two locating pins fit into Ø**5** x **5** holes bored in the side of cabinet for proper positioning.

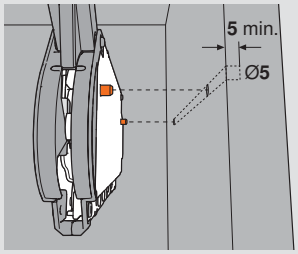

The included #7 x **35** (1-3/8") wood screws are required in the four holes marked in orange.

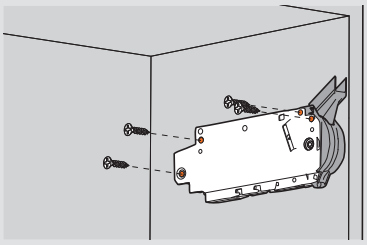

Refer to page 74 for angle restriction clip options

Telescopic arm mounting plate location

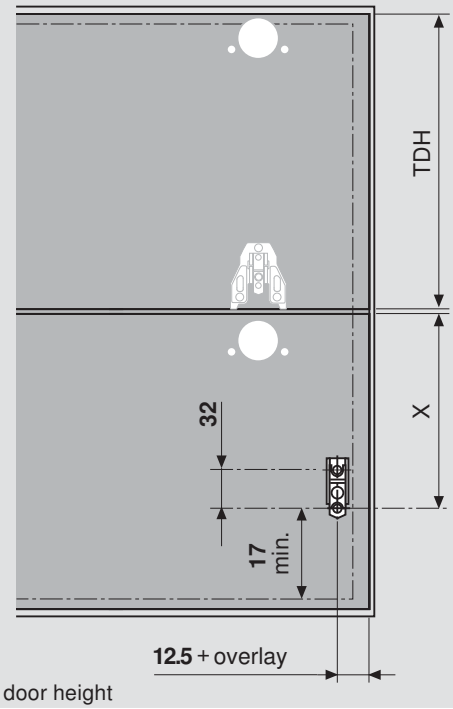

TDH = Top door height

NOTE: Dimensions same for frameless and face frame applications

TDH	X
231 – 271	TDH x .5 + **70**
272 – 531	TDH x .5 + **47**

NOTE: Three hinges are required for cabinet widths over **1219** (48") or 26.5 lb combined door weight

Telescopic arm mounting plate choices

Mounting plate

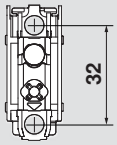

Slab door for frameless

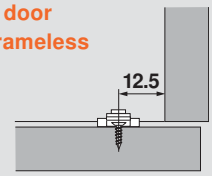

Slab door for face frame

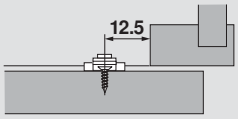

Five-piece door

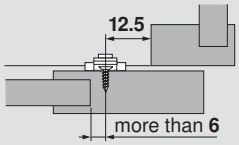

Mounting plate with bracket for large overlay five-piece doors

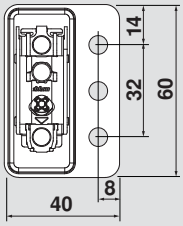

Five-piece door

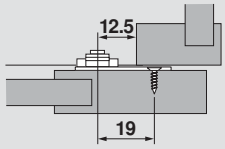

NOTE: Hole locations offset by **19** (example: **12.5** + overlay - **19** = hole location from side)

Frameless Application

CLIP top hinge

Top door hinge

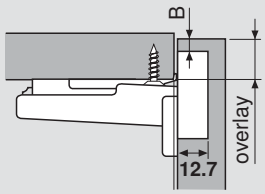

*Bore at **3** then adjust **1**

Overlay				
13*	14	15	16	17
3	3	4	5	6

B = Bore distance

Face Frame Application

CLIP top hinge

Top door hinge – small overlay

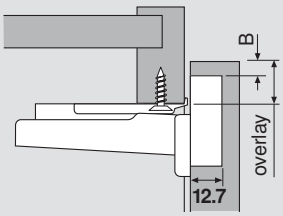

*Bore at **3** then adjust **1**

Overlay				
13*	14	15	16	17
3	3	4	5	6

B = Bore distance

Top door hinge – large overlay

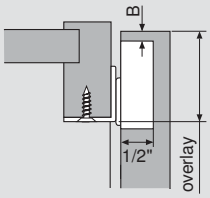

Overlay
32 (1-1/4")
3 (1/8")

B = Bore distance

CLIP top hinge

Bottom door hinge

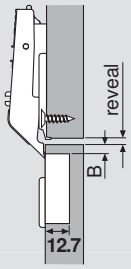

Reveal			
6	5	4	3
3	4	5	6

B = Bore distance

Follow the assembly instructions on page 18

AVENTOS

AVENTOS HF Ordering Information for Narrow Aluminum

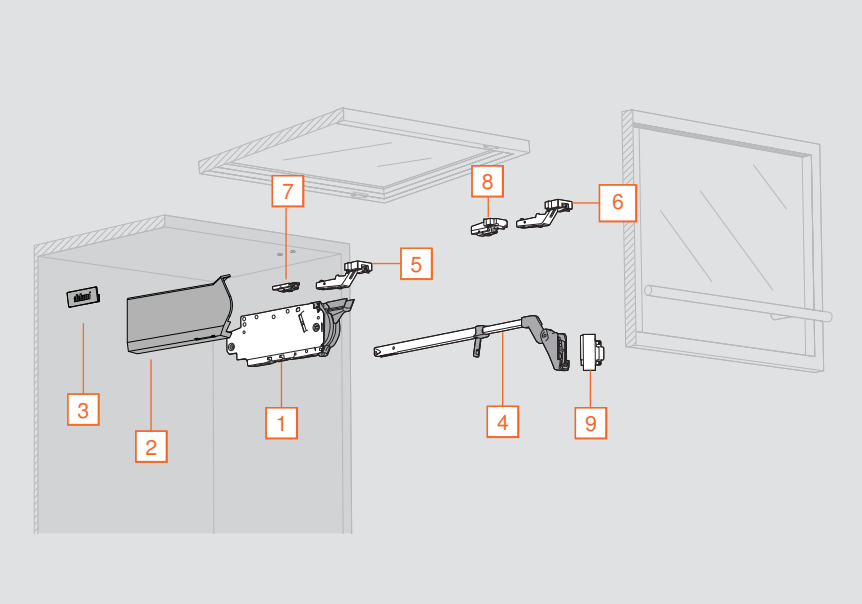

- Well suited for large cabinets
- For narrow aluminum door hardware
- Cabinet height from **479** (18-7/8") to **1067** (42")
- Cabinet width from **381** (15") to **1828** (72")
- Interior depth minimum **278** (10-15/16")
- Center hinge with finger safety feature
- Three-dimensional front adjustment of both fronts
- Closes silently and effortlessly with BLUMOTION
- Optional: SERVO-DRIVE for AVENTOS

Warning: Risk of injury by spring-loaded lever arm!

- Do not push lever arm down
- Secure lever arm before installing cabinet

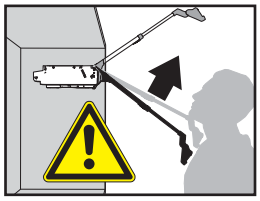

Step 1 – Determine the Power Factor for the Application

Power factor = cabinet height (inch) x combined door weight* (lb)

Determine power factor

To select the correct lift mechanism for a given application, the power factor must first be calculated by using the formula below.
Use the table at the bottom of the page to convert ounces into decimal form for easy calculation.

Power factor = cabinet height multiplied by combined door weight*

Example:
Cabinet height: 30" (within possible range)
Combined door weight = 23 lb 14 oz (14 oz = .9 lb see chart below)

Power factor = 30 x 23.9
Power factor = 717

A power factor of 717 requires lift mechanism 20F2500.N5

*Including handle weight

NOTE: AVENTOS planning tools available at blum.com/configurator

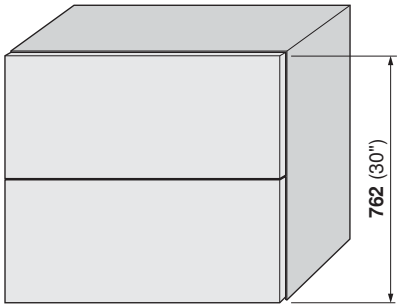

Combined door weight* = **23** lb 14 oz

Weight conversion chart															
oz	1	2	3	4	5	6	7	8	9	10	11	12	13	14	15
lb	.1	.1	.2	.3	.3	.4	.4	.5	.6	.6	.7	.8	.8	.9	.9

Step 2 – Select the Required Components

Lift mechanism set

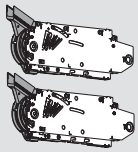

Set includes:

1 Lift mechanism (qty 2)

- #7 x **35** (1-3/8") wood screw (qty 8)

NOTE: It is recommended to use the more powerful lift mechanism for overlapping areas

Power factor range	Part no.
85 – 230 (one lift mechanism required)	20F2200.N5
231 – 470	20F2200.N5
471 – 880	20F2500.N5
881 – 1440	20F2800.N5
1441 – 2300 (three lift mechanisms required)	20F2800.N5

Cover set

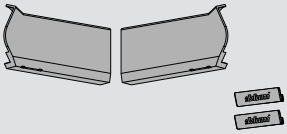

Set includes:

2 Right and left cover plate

3 Non-handed cover cap (qty 2)

NOTE: Light Gray, Dark Gray and Silk White options available

- Light Gray (HGIG)
- Dark Gray (TGIG)
- Silk White (SWIG)

	Part no.
Cover set	20F8020.NA

Telescopic arm set

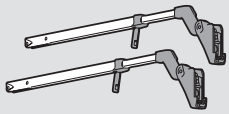

Set includes:

4 Telescopic arm (qty 2)

NOTE: One telescopic arm is required per lift mechanism

Cabinet height range	Part no.
479 (18-7/8") – **558** (22")	20F3200.01
558 (22") – **686** (27")	20F3500.01
686 (27") – **889** (35")	20F3800.01
889 (35") – **1067** (42")	20F3900.01

Narrow aluminum door hardware set

Set includes:

5 72T550A.TL – CLIP top free swing narrow alum. top door hinge (qty 2)

6 78Z550AT – CLIP top narrow aluminum bottom door hinge (qty 2)

7 175H3100 – Top door mounting plate (qty 2)

8 175H5A00 – Bottom door mounting plate (qty 2)

9 175H5B00 – Telescopic arm mounting plate (qty 2)

- #699.110 – Aluminum screw for the bottom door mounting plate, bottom hinge, top hinge and telescopic arm mounting plate (qty 18)

NOTE: Three hinges and mounting plates are required for cabinet widths over **1219** (48") or combined door weight of 26.5 lb

	Part no.
Narrow aluminum hardware set	78Z550ATA6
Installation screw for top mounting plate	606N or 606P

SERVO-DRIVE for AVENTOS available, see page 82 for more information

AVENTOS HF Planning Specifications for Narrow Aluminum

Frameless Application

Door and hardware clearance

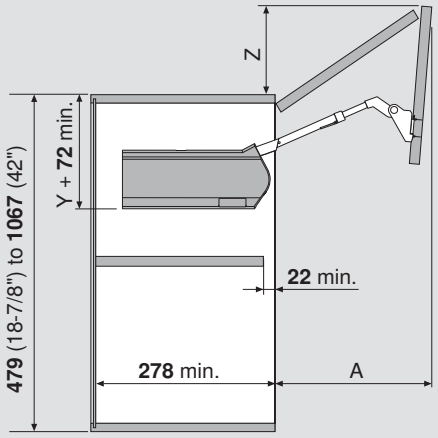

Y = See table below
Z = Top door height x .44 + **38**
A = Top door height x .9 + (1.5 x bottom door thickness)

Bore for the locating pins

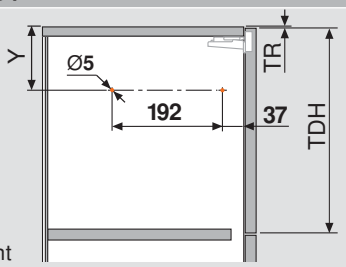

TR = Top reveal
TDH = Top door height

NOTE: Locating pin holes shown in orange

TDH	Y
231 – 271	TDH x .6 minus **28** + TR
272 – 531	TDH x .6 minus **57** + TR

Lift mechanism clearance

*Clearance required for SERVO-DRIVE

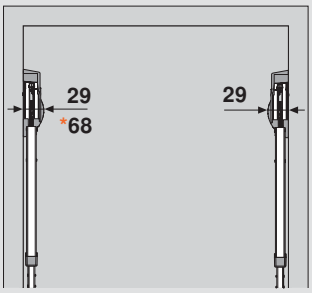

Lift mechanism positioning

Two locating pins fit into Ø**5** x **5** holes bored in the side of cabinet for proper positioning.

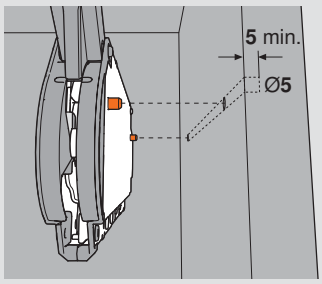

The included #7 x **35** (1-3/8") wood screws are required in the four holes marked in orange.

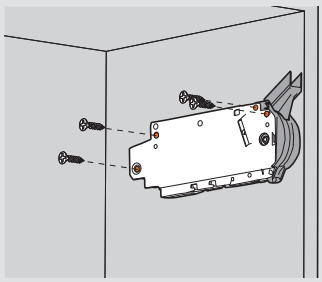

Refer to page 74 for angle restriction clip options

Telescopic arm mounting plate location

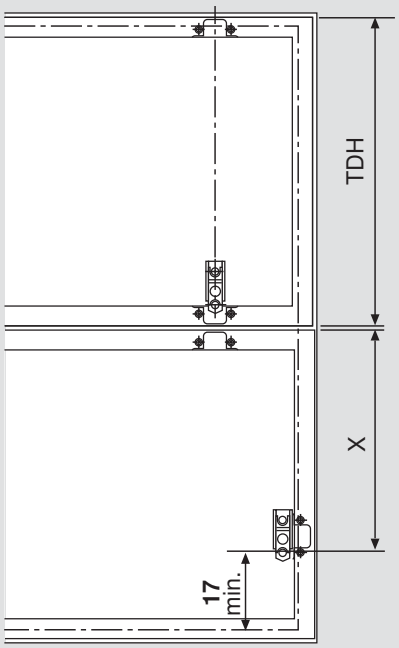

TDH = Top door height

TDH	X
231 – 271	TDH x .5 + **70**
272 – 531	TDH x .5 + **47**

NOTE: Three hinges are required for cabinet widths over **1219** (48") or 26.5 lb combined door weight

Hinge and mounting plate attachment

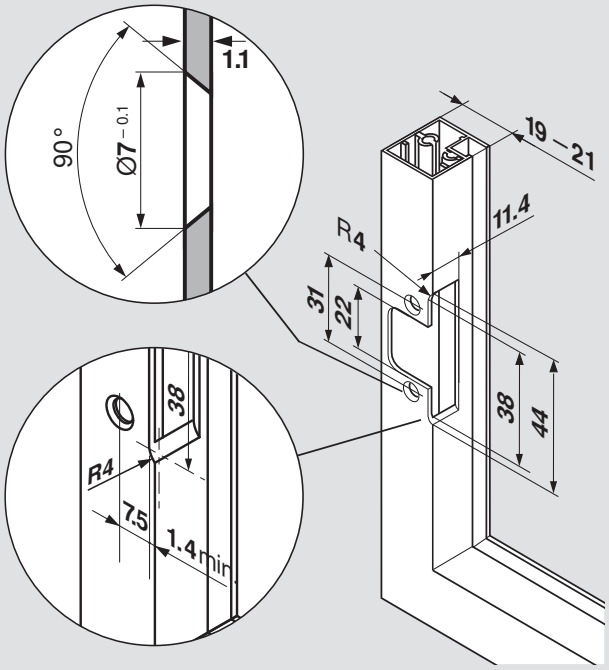

CLIP top aluminum door hinge

Top door hinge

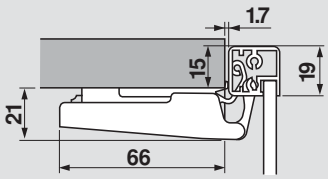

NOTE: Fixed **4** reveal

CLIP top hinge

Bottom door hinge

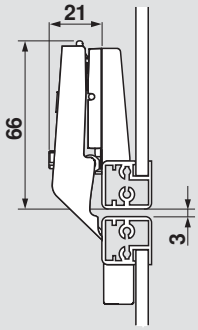

Follow the assembly instructions on page 18

Attaching the telescopic arms

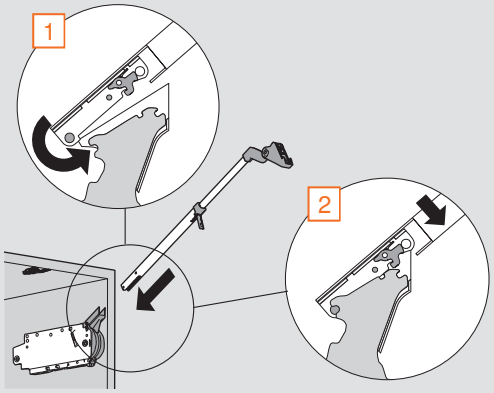

Attaching the top door to the cabinet

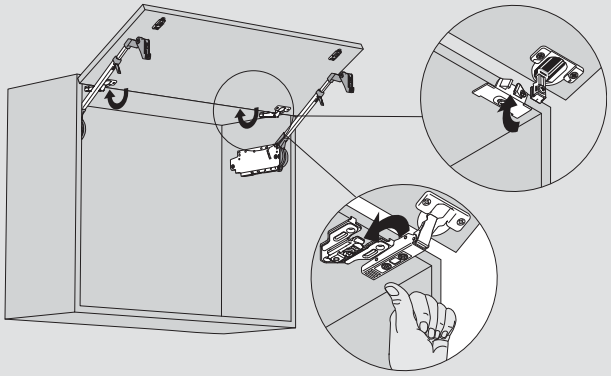

Attaching the bottom door to the cabinet

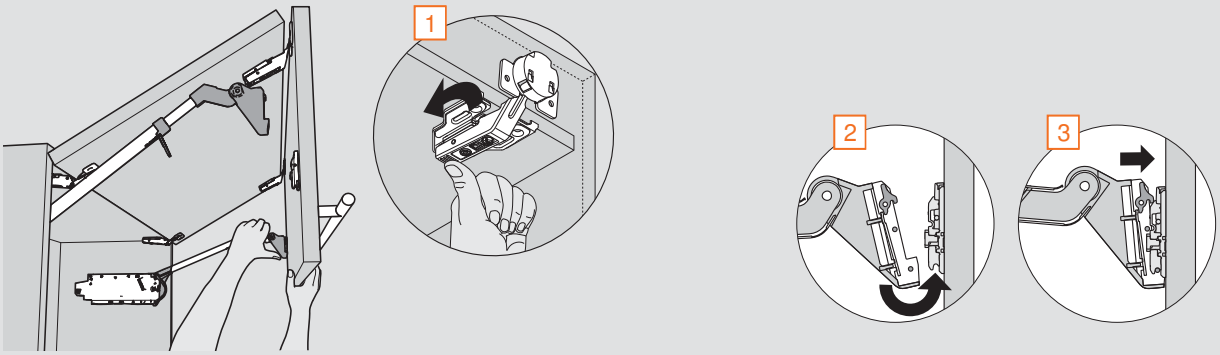

Warning: Risk of injury by spring-loaded telescopic arm!

- Do not push telescopic arm down
- Remove telescopic arm from mechanism before installing cabinet

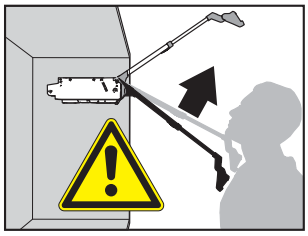

AVENTOS HF Adjustments

AVENTOS

blum

Lift mechanism tension adjustment

1 Close and flush doors to cabinet. Open and close door to test closing force.

2 Use a screw gun and a #2x2 POZI driver bit to adjust the lift mechanism to the desired tension. Test door again and repeat until desired function is achieved. Tension adjustment should be the same on both lift mechanisms.

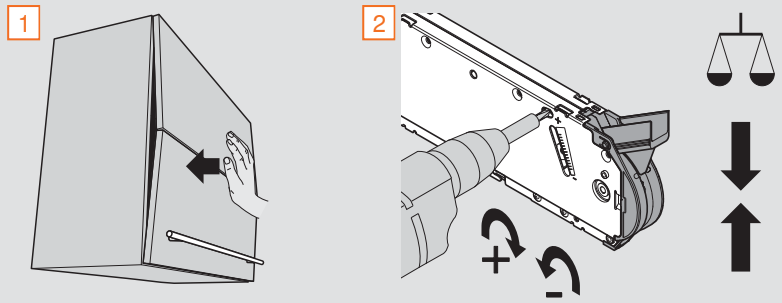

AVENTOS HF door adjustments

1 Adjust each top door hinge and mounting plate to properly align the top door to the cabinet.

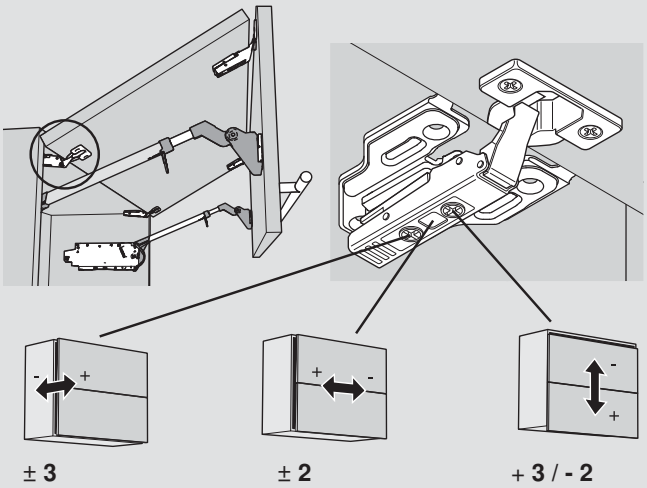

2 Adjust each bottom door hinge and mounting plate to properly align doors to the cabinet and to the top door.

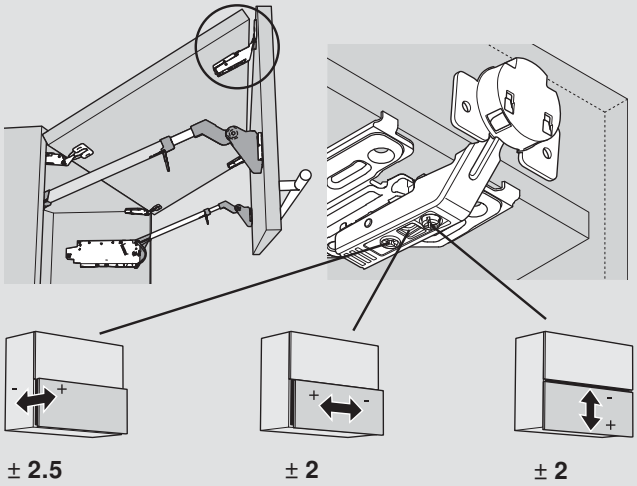

NOTE: Although not illustrated here, telescopic arm mounting plates can also be adjusted horizontally ± **2** if needed

Adjust and lock telescopic arms

1 Close and flush doors to cabinet. While pressing on the top door, pull the bottom door open approximately one inch.

2 Slightly open door and lock the telescopic arms into position using the levers as shown.

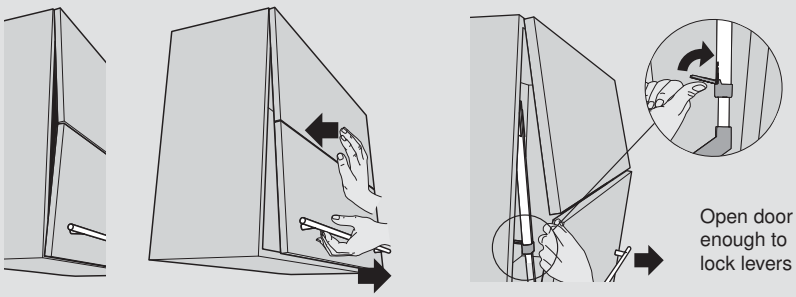

Attaching cover caps

Place the left and right cover plates over the appropriate lift mechanisms and snap them in place.

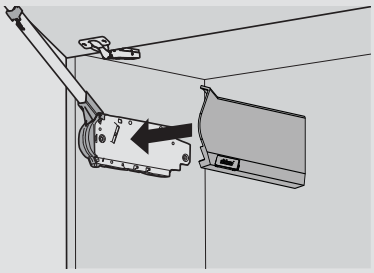

AVENTOS HS

Up, Over and Out of the Way

With AVENTOS HS, the single front swings over the cabinet and is ideal for large-area, single fronts. The up-and-over lift system is also perfect for cabinets with crown molding.

Easy Installation and Adjustment

The three-dimensional adjustment feature enables doors to be precisely aligned during installation and tolerances to be maintained with ease.

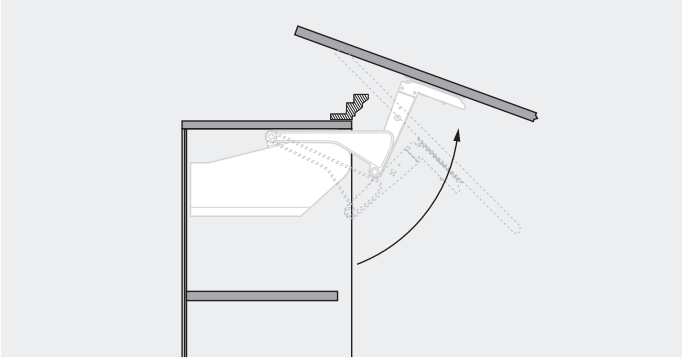

Crown Molding Clearance

When developing the AVENTOS HS up-and-over lift mechanism, we also took into account cabinets with decorative molding.

The Motion Inside

The amount of technology and components placed into each lift mechanism are what provide the unparalleled smooth operation of AVENTOS.

AVENTOS HS Ordering Information for Frameless and Face Frame

Step 1 – Select the Required Lift Mechanism Set

Using the charts

Each chart covers three different lift mechanisms (nine total). To select the required lift mechanism set, find the cabinet height on the left side of the chart, then go across to the range that contains the weight of your door in pounds and ounces. Follow that column to the top orange box to get the part number for the lift mechanism set required for your application.

NOTE: Part numbers in **ORANGE**, pounds and millimeters are **bold**

Cabinet height		Door weight – lb/oz		
inch	mm	20S2A00.N5	20S2B00.N5	20S2C00.N5
14	**349 – 359**	4/6 – 10/5	10/6 – 20/11	20/12 – 23/2
	360 – 364	4/6 – 10/5	10/6 – 20/11	20/12 – 23/10
	365 – 374	4/6 – 10/5	10/6 – 20/3	20/4 – 23/3
15	**375 – 384**	4/6 – 10/5	10/6 – 20/3	20/4 – 24/11
	385 – 389	4/6 – 10/5	10/6 – 20/3	20/4 – 24/5
	390 – 394	4/6 – 10/5	10/6 – 19/10	19/11 – 25/5
	395 – 399	4/6 – 10/5	10/6 – 19/10	19/11 – 25/13
16	**400 – 409**	5/0 – 9/11	9/12 – 19/10	19/11 – 26/7
	410 – 414	5/0 – 9/11	9/12 – 19/10	19/11 – 26/15
	415 – 424	5/0 – 9/11	9/12 – 19/2	19/3 – 27/8
17	**425 – 434**	5/0 – 9/11	9/12 – 19/2	19/3 – 28/0
	435 – 439	5/0 – 9/11	9/12 – 19/2	19/3 – 28/10
	440 – 444	5/0 – 9/11	9/12 – 18/8	18/9 – 28/10
	445 – 449	5/0 – 9/11	9/12 – 18/8	18/9 – 29/2
18	**450 – 459**	5/0 – 9/3	9/4 – 18/8	18/9 – 29/11
	460 – 464	5/0 – 9/3	9/4 – 18/0	18/1 – 30/3
	465 – 469	5/8 – 9/3	9/4 – 18/0	18/1 – 30/3
	470 – 474	5/8 – 9/3	9/4 – 18/0	18/1 – 30/13
	475 – 479	5/8 – 9/0	9/1 – 17/7	17/8 – 30/13
19	**480 – 489**	5/8 – 9/0	9/1 – 17/7	17/8 – 31/5
	490 – 494	5/8 – 9/0	9/1 – 17/7	17/8 – 31/15
	495 – 499	5/8 – 9/0	9/1 – 16/15	17/0 – 31/15
20	**500 – 514**	5/8 – 8/8	8/9 – 16/15	17/0 – 32/7
	515 – 519	5/8 – 8/8	8/9 – 16/5	16/6 – 32/7
	520 – 525	5/8 – 8/8	8/9 – 16/5	16/6 – 33/0

Warning: Risk of injury by arm assembly!

- Do not push assembly down
- Remove arm assembly from mechanism before installing cabinet

Cabinet height		Door weight – lb/oz		
inch	mm	20S2D00.N5	20S2E00.N5	20S2F00.N5
21	**526 – 539**	6/9 – 14/8	14/9 – 27/7	27/8 – 36/13
	540 – 544	6/9 – 14/0	14/1 – 27/7	27/8 – 37/7
	545 – 554	6/9 – 14/0	14/1 – 26/15	27/0 – 27/15
22	**555 – 559**	6/9 – 14/0	14/1 – 26/15	27/0 – 38/8
	560 – 564	6/9 – 14/0	14/1 – 26/5	26/6 – 38/8
	565 – 574	6/9 – 13/7	13/8 – 26/5	26/6 – 39/0
23	**575 – 584**	6/9 – 13/7	13/8 – 25/13	25/14 – 39/10
	585 – 589	6/9 – 13/7	13/8 – 25/11	25/12 – 40/2
	590 – 594	6/9 – 12/15	13/0 – 25/11	25/12 – 40/2
24	**595 – 614**	6/9 – 12/15	13/0 – 25/2	25/3 – 40/11
	615 – 634	6/9 – 12/8	12/9 – 24/10	24/11 – 41/3
25	**635 – 639**	6/9 – 11/15	12/0 – 24/10	24/11 – 41/3
	640 – 649	6/9 – 11/15	12/0 – 24/0	24/1 – 41/3
26	**650 – 664**	6/9 – 11/15	12/0 – 24/0	24/1 – 41/13
	665 – 675	6/9 – 11/7	11/8 – 23/8	23/9 – 41/13

Cabinet height		Door weight – lb/oz		
inch	mm	20S2G00.N5	20S2H00.N5	20S2I00.N5
	676 – 684	7/11 – 17/0	17/1 – 29/7	29/8 – 47/5
27	**685 – 689**	7/11 – 17/0	17/1 – 28/13	28/14 – 47/5
	690 – 694	7/11 – 16/7	16/8 – 28/13	28/14 – 47/5
	695 – 704	7/11 – 16/7	16/8 – 28/11	28/12 – 47/5
	705 – 709	7/11 – 16/7	16/8 – 28/8	28/9 – 47/5
28	**710 – 714**	7/11 – 16/7	16/8 – 28/8	28/9 – 46/11
	715 – 724	7/11 – 16/0	16/1 – 28/0	28/1 – 46/11
	725 – 729	7/11 – 16/0	16/1 – 28/0	28/1 – 46/3
	730 – 734	7/11 – 16/0	16/1 – 27/15	28/0 – 46/3
29	**735 – 739**	7/11 – 15/15	16/0 – 27/15	28/0 – 45/10
	740 – 744	7/11 – 15/8	15/9 – 27/7	27/8 – 45/10
	745 – 749	7/11 – 15/8	15/9 – 27/5	27/6 – 45/2
	750 – 754	8/4 – 15/8	15/9 – 27/5	27/6 – 45/2
	755 – 759	8/4 – 15/8	15/9 – 27/3	27/4 – 45/2
30	**760 – 764**	8/4 – 15/8	15/9 – 27/0	27/1 – 44/8
	765 – 769	8/4 – 15/8	15/9 – 26/10	27/11 – 44/8
	770 – 774	8/4 – 14/15	15/0 – 26/10	26/11 – 44/8
	775 – 779	8/12 – 14/15	15/0 – 26/10	26/11 – 44/8
	780 – 784	8/12 – 14/15	15/0 – 26/8	26/9 – 44/8
31	**785 – 789**	8/12 – 14/15	15/0 – 26/8	26/9 – 44/8
	790 – 800	8/12 – 14/13	14/14 – 25/15	26/0 – 44/0

Required components

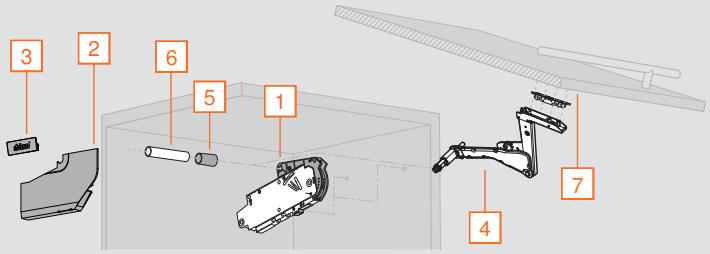

Step 2 – Select the Required Components

Lift mechanism set

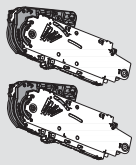

Set includes:

1 Lift mechanism (qty 2)

- #7 x **35** (1-3/8") wood screw (qty 10)

NOTE: For correct ordering of lift mechanism set, use the charts on the previous page

Part no.		
20S2A00.N5	20S2B00.N5	20S2C00.N5
20S2D00.N5	20S2E00.N5	20S2F00.N5
20S2G00.N5	20S2H00.N5	20S2I00.N5

Cover set

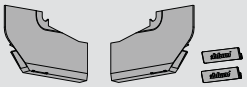

Set includes:

2 Right and left cover plate

3 Non-handed cover cap (qty 2)

NOTE: Light Gray, Dark Gray and Silk White options available

Light Gray (HGIG) Dark Gray (TGIG) Silk White (SWIG)

	Part no.
Cover set	20S8020.NA

Arm assembly set

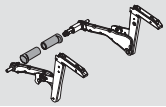

Set includes:

4 Right and left arm assembly

5 Stabilizer rod cover cap (qty 2)

	Part no.
Arm assembly set	20S3500.06

Round stabilizer rod

6 Round stabilizer rod

NOTE: Cabinets wider internally than 46.5" require a stabilizer rod connector set, see page 78

- Aluminum rod length **1061** (41-3/4"), cut to size
- Length = inside cabinet width minus **129** (5-1/16") for SERVO-DRIVE minus **164** (6-7/16")

	Part no.
Round stabilizer rod	20Q1061UN

Wood or wide aluminum door hardware set

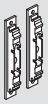

Set includes:

7 Arm assembly mounting plate (qty 2)

	Part no.
Wood or wide aluminum hardware set	20S4200
Installation screw for wood doors	606N or 606P
Installation screw for wide aluminum doors	7072A

Mounting plate with bracket set

Set includes:

- Mounting plate with bracket (qty 2)

For use with large overlay five-piece doors

	Part no.
Mounting plate with bracket set	20S4F01

SERVO-DRIVE for AVENTOS available, see page 82 for more information

AVENTOS

AVENTOS HS Planning Specifications for Frameless and Face Frame

Frameless Application

Door and hardware clearance

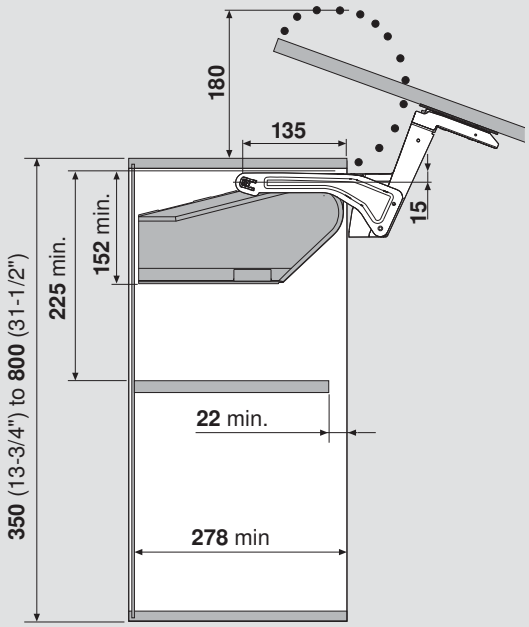

Bore for the locating pins

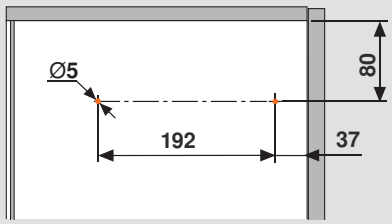

NOTE: Locating pin holes shown in orange

Face Frame Application

Door and hardware clearance

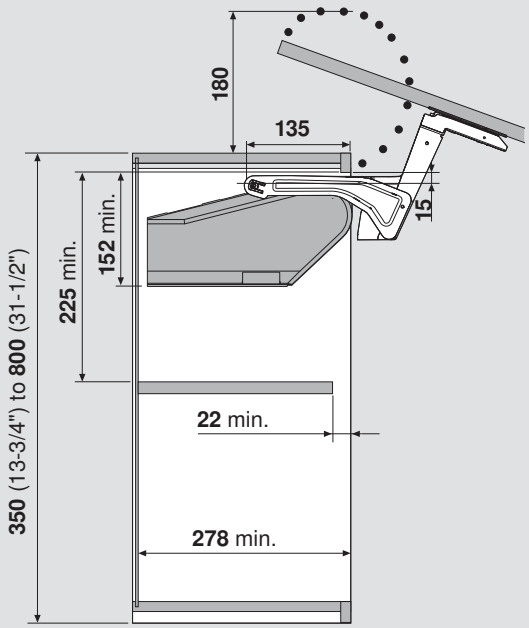

Bore for the locating pins

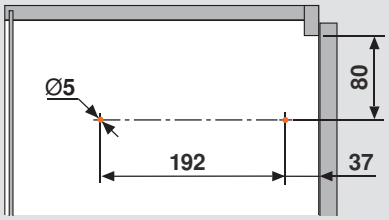

NOTE: Locating pin holes shown in orange

Lift mechanism clearance

*Clearance required for SERVO-DRIVE

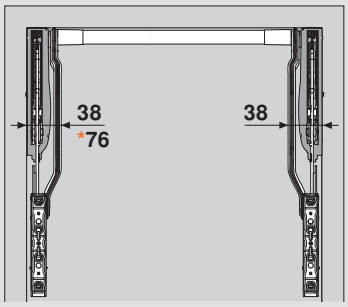

Lift mechanism positioning

Two locating pins fit into Ø**5** x **5** holes bored in the side of cabinet for proper positioning.

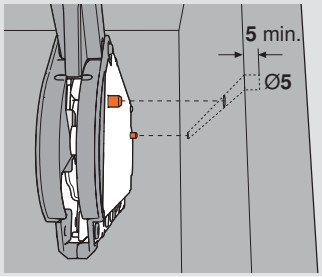

The included #7 x **35** (1-3/8") wood screws are required in the five holes marked in orange.

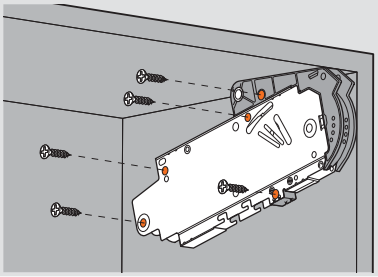

NOTE: Face frame cabinets must be blocked-out on the sides flush with the frame

Arm assembly mounting plate location

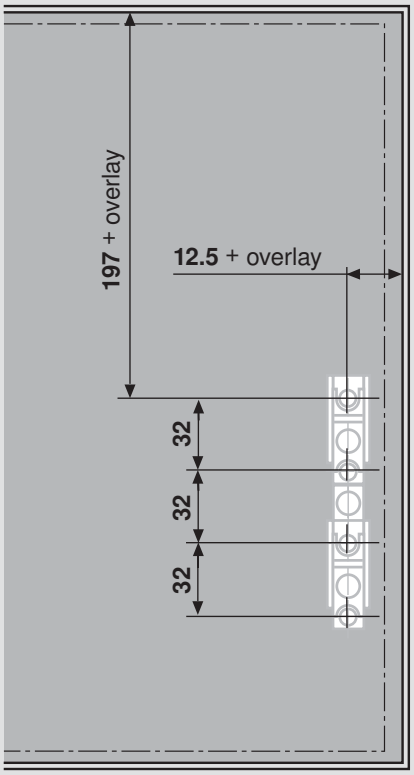

Minimum **5** side reveal when adjacent to wall

NOTE: Attach mounting plate with four 606N or 606P wood screws for wood doors or 7072A for wide aluminum doors

Arm assembly mounting plate choices

Mounting plate

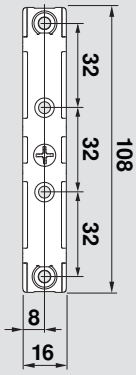

Slab door

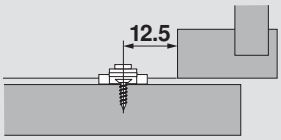

Five-piece door

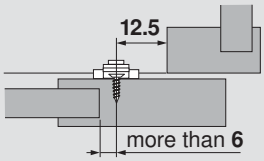

Mounting plate with bracket for large overlay five-piece doors

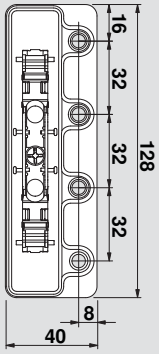

Five-piece door

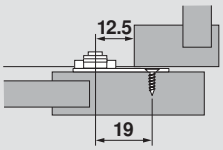

NOTE: Hole locations offset by **19** (example: **12.5** + overlay - **19** = hole location from side)

Door and Hardware Clearance

Door protrusion for common cabinet heights

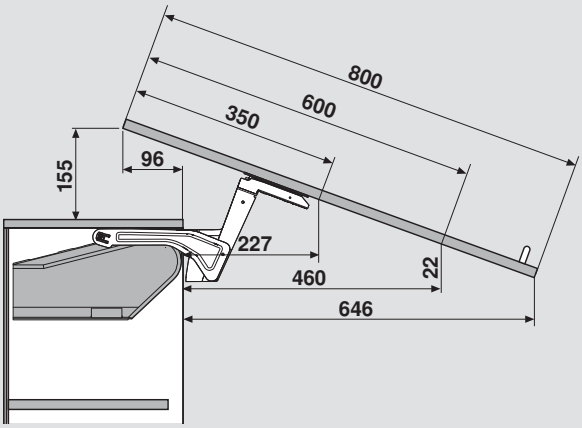

NOTE: Based on **19** panel thickness and panel overlay

Crown molding clearance

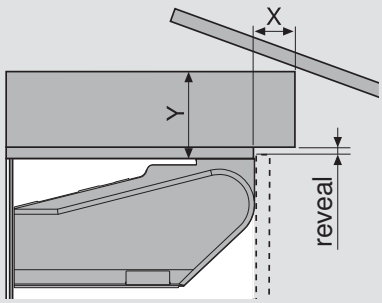

Reveal	Maximum X	Maximum Y
3 (1/8")	**35** (1-3/8")	**101** (4")
2 (1/16")	**31** (1-1/4")	**101** (4")
1.5 (1/16")	**28** (1-1/8")	**101** (4")

Follow the assembly instructions on page 30

AVENTOS HS Ordering Information for Narrow Aluminum

Step 1 – Select the Required Lift Mechanism Set

Using the charts

Each chart covers three different lift mechanisms (nine total). To select the required lift mechanism set, find the cabinet height on the left side of the chart, then go across to the range that contains the weight of your door in pounds and ounces. Follow that column to the top orange box to get the part number for the lift mechanism set required for your application.

NOTE: Part numbers in **ORANGE**, pounds and millimeters are **bold**

Cabinet height		Door weight – lb/oz		
inch	mm	20S2A00.N5	20S2B00.N5	20S2C00.N5
14	349 – 359	4/6 – 10/5	10/6 – 20/11	20/12 – 23/2
	360 – 364	4/6 – 10/5	10/6 – 20/11	20/12 – 23/10
	365 – 374	4/6 – 10/5	10/6 – 20/3	20/4 – 23/3
15	375 – 384	4/6 – 10/5	10/6 – 20/3	20/4 – 24/11
	385 – 389	4/6 – 10/5	10/6 – 20/3	20/4 – 24/5
	390 – 394	4/6 – 10/5	10/6 – 19/10	19/11 – 25/5
	395 – 399	4/6 – 10/5	10/6 – 19/10	19/11 – 25/13
16	400 – 409	5/0 – 9/11	9/12 – 19/10	19/11 – 26/7
	410 – 414	5/0 – 9/11	9/12 – 19/10	19/11 – 26/15
	415 – 424	5/0 – 9/11	9/12 – 19/2	19/3 – 27/8
17	425 – 434	5/0 – 9/11	9/12 – 19/2	19/3 – 28/0
	435 – 439	5/0 – 9/11	9/12 – 19/2	19/3 – 28/10
	440 – 444	5/0 – 9/11	9/12 – 18/8	18/9 – 28/10
	445 – 449	5/0 – 9/11	9/12 – 18/8	18/9 – 29/2
18	450 – 459	5/0 – 9/3	9/4 – 18/8	18/9 – 29/11
	460 – 464	5/0 – 9/3	9/4 – 18/0	18/1 – 30/3
	465 – 469	5/8 – 9/3	9/4 – 18/0	18/1 – 30/3
	470 – 474	5/8 – 9/3	9/4 – 18/0	18/1 – 30/13
	475 – 479	5/8 – 9/0	9/1 – 17/7	17/8 – 30/13
19	480 – 489	5/8 – 9/0	9/1 – 17/7	17/8 – 31/5
	490 – 494	5/8 – 9/0	9/1 – 17/7	17/8 – 31/15
	495 – 499	5/8 – 9/0	9/1 – 16/15	17/0 – 31/15
20	500 – 514	5/8 – 8/8	8/9 – 16/15	17/0 – 32/7
	515 – 519	5/8 – 8/8	8/9 – 16/5	16/6 – 32/7
	520 – 525	5/8 – 8/8	8/9 – 16/5	16/6 – 33/0

Warning: Risk of injury by arm assembly!

- Do not push assembly down
- Remove arm assembly from mechanism before installing cabinet

Cabinet height		Door weight – lb/oz		
inch	mm	20S2D00.N5	20S2E00.N5	20S2F00.N5
21	526 – 539	6/9 – 14/8	14/9 – 27/7	27/8 – 36/13
	540 – 544	6/9 – 14/0	14/1 – 27/7	27/8 – 37/7
	545 – 554	6/9 – 14/0	14/1 – 26/15	27/0 – 27/15
22	555 – 559	6/9 – 14/0	14/1 – 26/15	27/0 – 38/8
	560 – 564	6/9 – 14/0	14/1 – 26/5	26/6 – 38/8
	565 – 574	6/9 – 13/7	13/8 – 26/5	26/6 – 39/0
23	575 – 584	6/9 – 13/7	13/8 – 25/13	25/14 – 39/10
	585 – 589	6/9 – 13/7	13/8 – 25/11	25/12 – 40/2
	590 – 594	6/9 – 12/15	13/0 – 25/11	25/12 – 40/2
24	595 – 614	6/9 – 12/15	13/0 – 25/2	25/3 – 40/11
	615 – 634	6/9 – 12/8	12/9 – 24/10	24/11 – 41/3
25	635 – 639	6/9 – 11/15	12/0 – 24/10	24/11 – 41/3
	640 – 649	6/9 – 11/15	12/0 – 24/0	24/1 – 41/3
26	650 – 664	6/9 – 11/15	12/0 – 24/0	24/1 – 41/13
	665 – 675	6/9 – 11/7	11/8 – 23/8	23/9 – 41/13

Cabinet height		Door weight – lb/oz		
inch	mm	20S2G00.N5	20S2H00.N5	20S2I00.N5
	676 – 684	7/11 – 17/0	17/1 – 29/7	29/8 – 47/5
27	685 – 689	7/11 – 17/0	17/1 – 28/13	28/14 – 47/5
	690 – 694	7/11 – 16/7	16/8 – 28/13	28/14 – 47/5
	695 – 704	7/11 – 16/7	16/8 – 28/11	28/12 – 47/5
	705 – 709	7/11 – 16/7	16/8 – 28/8	28/9 – 47/5
28	710 – 714	7/11 – 16/7	16/8 – 28/8	28/9 – 46/11
	715 – 724	7/11 – 16/0	16/1 – 28/0	28/1 – 46/11
	725 – 729	7/11 – 16/0	16/1 – 28/0	28/1 – 46/3
	730 – 734	7/11 – 16/0	16/1 – 27/15	28/0 – 46/3
29	735 – 739	7/11 – 15/15	16/0 – 27/15	28/0 – 45/10
	740 – 744	7/11 – 15/8	15/9 – 27/7	27/8 – 45/10
	745 – 749	7/11 – 15/8	15/9 – 27/5	27/6 – 45/2
	750 – 754	8/4 – 15/8	15/9 – 27/5	27/6 – 45/2
	755 – 759	8/4 – 15/8	15/9 – 27/3	27/4 – 45/2
30	760 – 764	8/4 – 15/8	15/9 – 27/0	27/1 – 44/8
	765 – 769	8/4 – 15/8	15/9 – 26/10	27/11 – 44/8
	770 – 774	8/4 – 14/15	15/0 – 26/10	26/11 – 44/8
	775 – 779	8/12 – 14/15	15/0 – 26/10	26/11 – 44/8
	780 – 784	8/12 – 14/15	15/0 – 26/8	26/9 – 44/8
31	785 – 789	8/12 – 14/15	15/0 – 26/8	26/9 – 44/8
	790 – 800	8/12 – 14/13	14/14 – 25/15	26/0 – 44/0

Required components

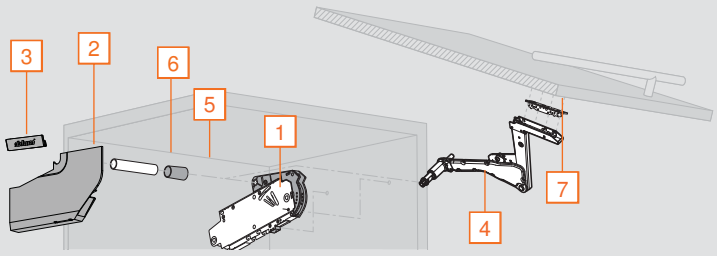

Step 2 – Select the Required Components

Lift mechanism set

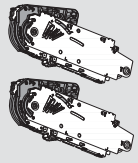

Set includes:

1 Lift mechanism (qty 2)

- #7 x **35** (1-3/8") wood screw (qty 10)

NOTE: For correct ordering of lift mechanism set, use the charts on the previous page

20S2A00.N5	20S2B00.N5	20S2C00.N5
20S2D00.N5	20S2E00.N5	20S2F00.N5
20S2G00.N5	20S2H00.N5	20S2I00.N5

Cover set

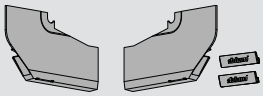

Set includes:

2 Right and left cover plate

3 Non-handed cover cap (qty 2)

NOTE: Light Gray, Dark Gray and Silk White options available

Light Gray (HGIG) Dark Gray (TGIG)

Silk White (SWIG)

	Part no.
Cover set	20S8020.NA

Arm assembly set

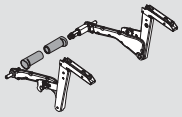

Set includes:

4 Right and left arm assembly

5 Stabilizer rod cover cap (qty 2)

	Part no.
Arm assembly set	20S3500.06

Round stabilizer rod

6 Round stabilizer rod

NOTE: Cabinets wider internally than 46.5" require a stabilizer rod connector set, see page 78

- Aluminum rod length **1061** (41-3/4"), cut to size
- Length = inside cabinet width minus **129** (5-1/16") for SERVO-DRIVE minus **164** (6-7/6")

	Part no.
Round stabilizer rod	20Q1061UN

Narrow aluminum door hardware set

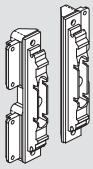

Set includes:

7 Narrow aluminum arm assembly mounting plate (qty 2)

- 699.110 – Aluminum screw fornarrow aluminum lever arm mounting plate (qty 8)

	Part no.
Narrow aluminum hardware set	20S4200A

SERVO-DRIVE for AVENTOS available, see page 82 for more information

AVENTOS HS Planning Specifications for Narrow Aluminum

Frameless Application

Door and hardware clearance

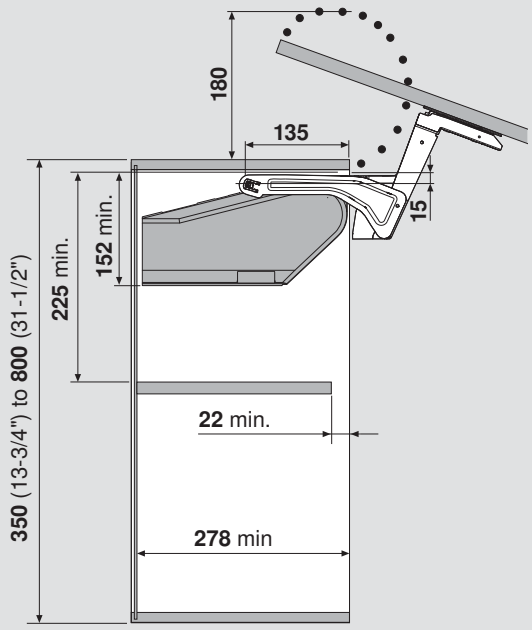

Bore for the locating pins

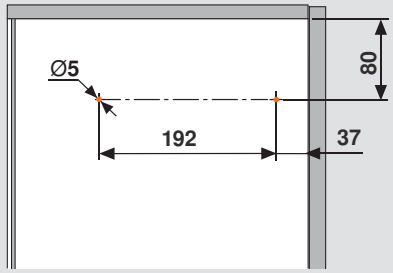

NOTE: Locating pin holes shown in orange

Lift mechanism clearance

*Clearance required for SERVO-DRIVE

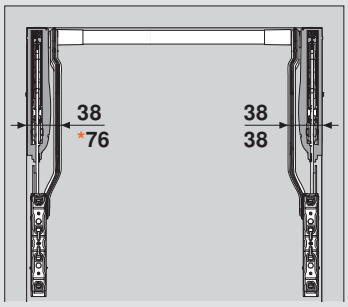

Lift mechanism positioning

Two locating pins fit into Ø**5** x **5** holes bored in the side of cabinet for proper positioning.

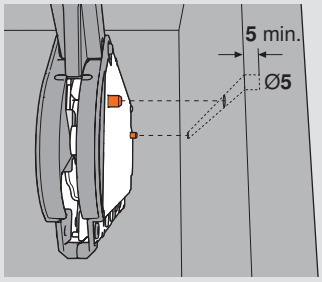

The included #7 x **35** (1-3/8") wood screws are required in the five holes marked in orange.

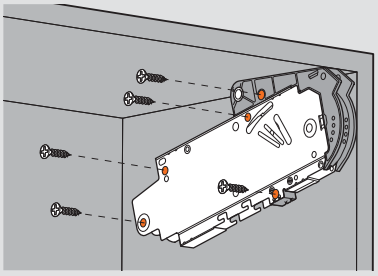

Arm assembly mounting plate location

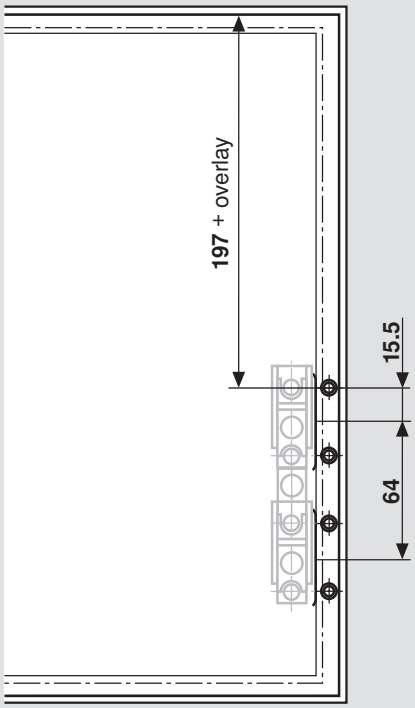

Minimum **5** side reveal when adjacent to wall

NOTE: Attach mounting plate with four 699.110 screws provided

Arm assembly mounting plate

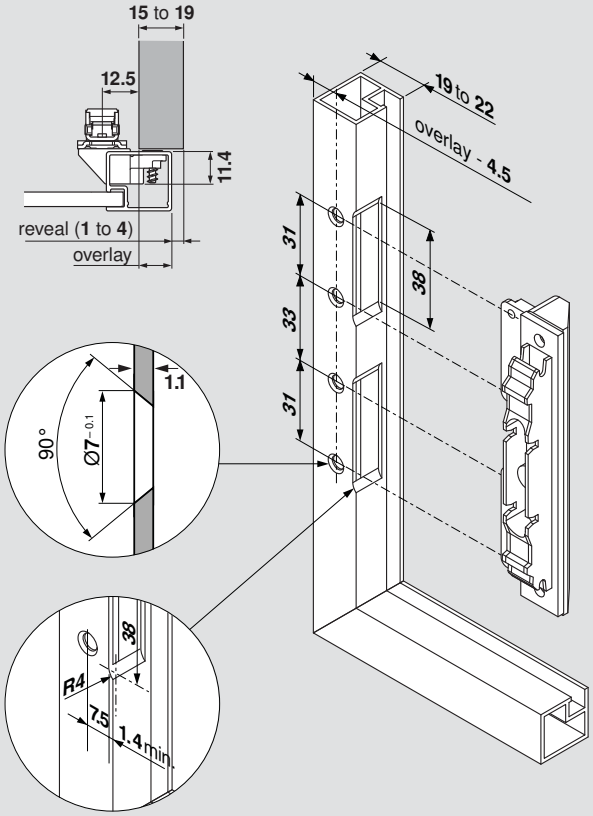

NOTE: When changing material thickness, adjust assembly dimensions accordingly

Door and Hardware Clearance

Door protrusion for common cabinet heights

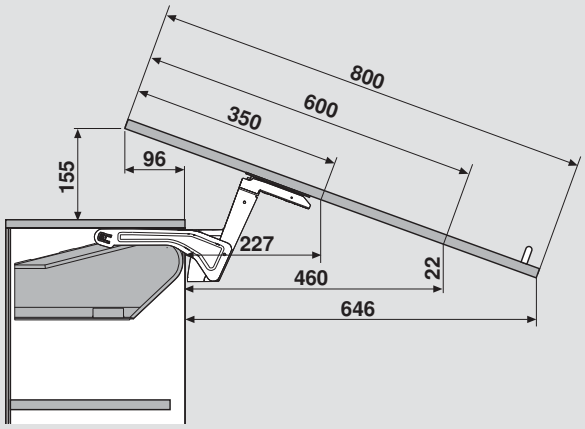

NOTE: Based on **19** panel thickness and panel overlay

Crown molding clearance

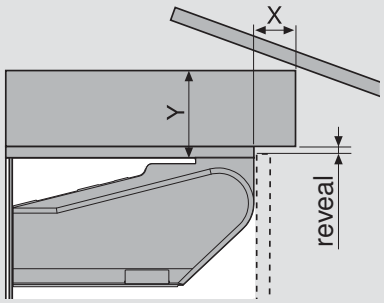

Reveal	Maximum X	Maximum Y
3 (1/8")	**35** (1-3/8")	**101** (4")
2 (1/16")	**31** (1-1/4")	**101** (4")
1.5 (1/16")	**28** (1-1/8")	**101** (4")

Follow the assembly instructions on page 30

Attaching the arm assembly

Find the right and left arm assemblies and match them to the correct side of the cabinet.

1 Attach the arm assembly to the lift mechanism as shown

2 Lift up on the arm assembly to lock into place

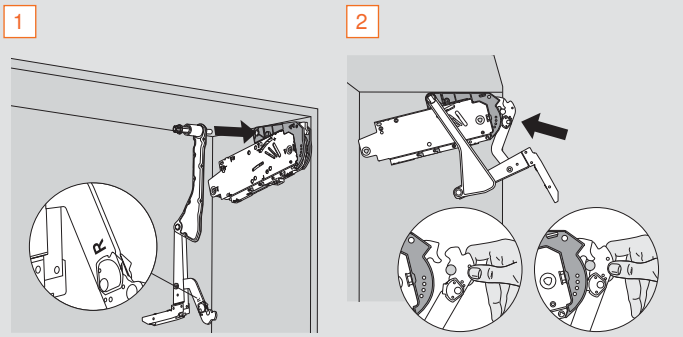

Removing the arm assembly

1 Insert screw driver behind notch in locking cam and pry outward

2 Remove arm assembly as shown

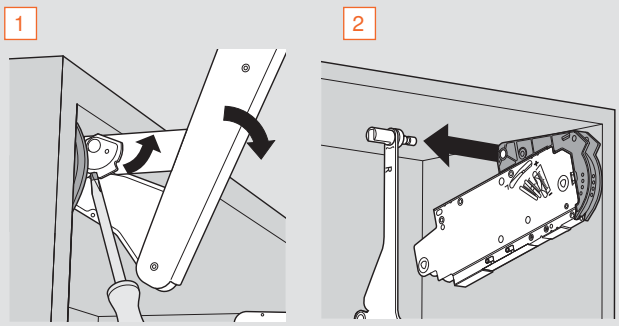

Attaching the stabilizer rod

Cut the stabilizer rod to fit the cabinet. Length = interior cabinet width minus **129** (5-1/16')
After cutting the rod to size follow steps 1, 2, and 3 below.

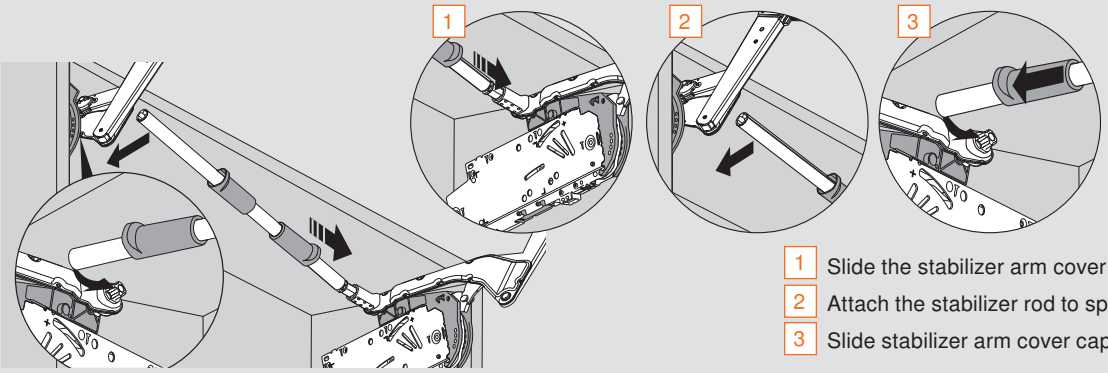

1 Slide the stabilizer arm cover caps onto the rod

2 Attach the stabilizer rod to spring loaded arm assembly

3 Slide stabilizer arm cover caps over rod on each end

Attaching the doors

Attach the door using the CLIP mechanism to the arm assembly

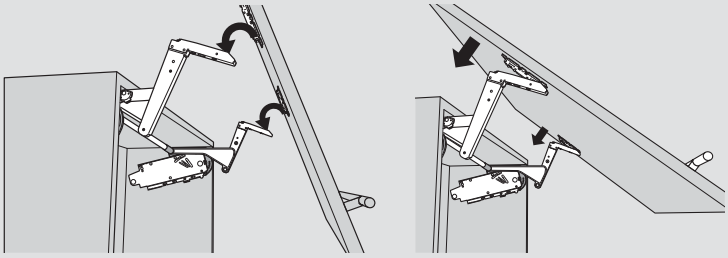

Warning: Risk of injury by arm assembly!

- Do not push telescopic arm down
- Remove telescopic arm from mechanism before installing cabinet

Adjusting the lift mechanism

Use a screw gun and a #2 x 2 POZI driver bit to adjust the lift mechanism to the desired tension (door weight balanced).

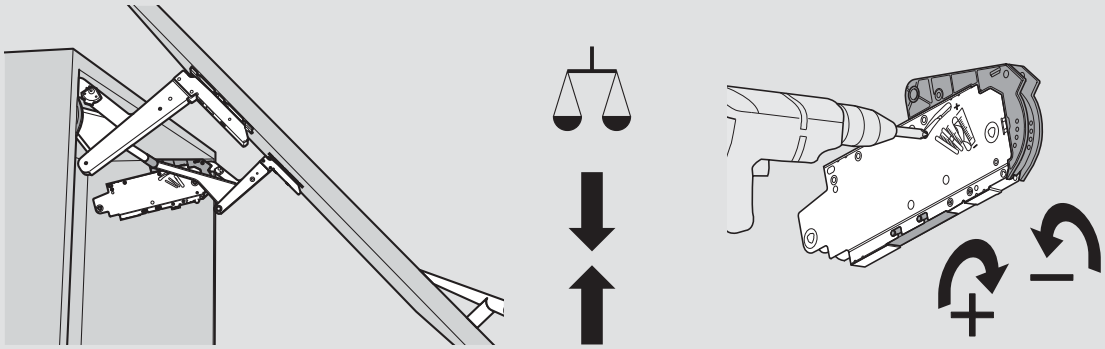

AVENTOS HS door adjustments

Use a POZI screwdriver to adjust cam adjustments for each of the three-dimensional door adjustments.

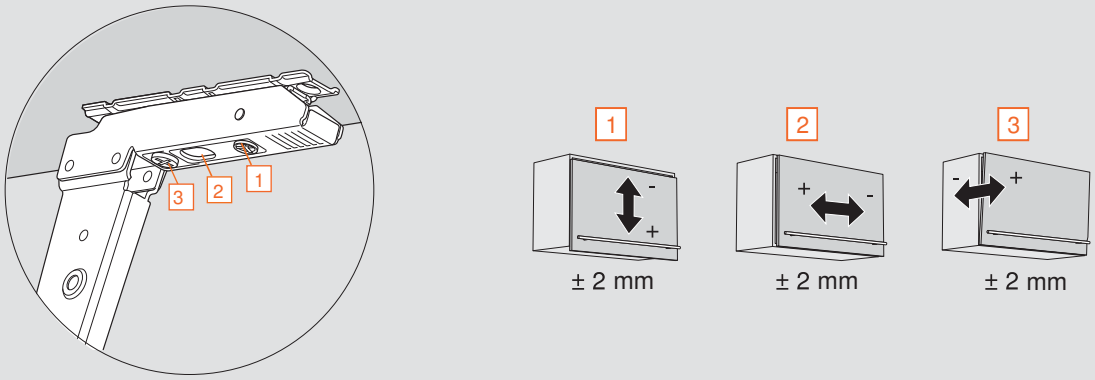

Attaching cover caps

Place the left and right cover plates over the appropriate lift mechanisms and snap them in place.

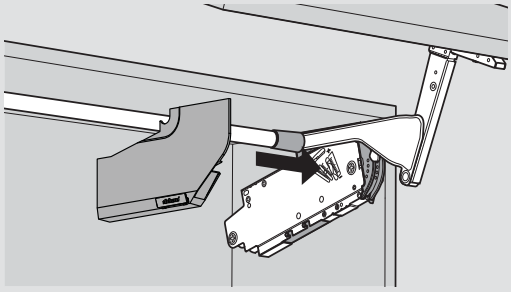

AVENTOS HL

Up and Out of the Way

The AVENTOS HL program offers several solutions in order to accommodate a wide range of cabinet sizes, including specialty application areas. When opened, the door travels in a parallel direction, making the AVENTOS HL a great option when objects such as cabinets or crown molding may cause interference.

Numerous Design Options

AVENTOS HL is perfect for use in wall cabinets, a pantry, or below another AVENTOS cabinet. On the countertop it can be used for an appliance garage.

Easy Installation and Adjustment

The three-dimensional adjustment feature enables doors to be precisely aligned during installation and tolerances to be maintained with ease.

The Motion Inside

The amount of technology and components placed into each lift mechanism are what provide the unparalleled smooth operation of AVENTOS.

AVENTOS HL Ordering Information for Frameless and Face Frame

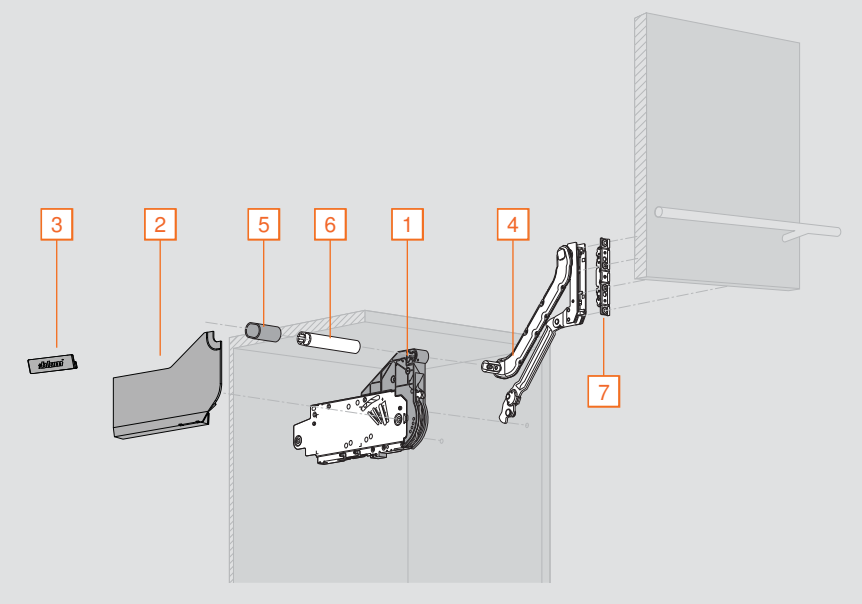

- Suited for wall cabinets and/or as an appliance garage application
- For both frameless and face frame applications
- Cabinet height from **300** (11-13/16") to **580** (22-13/16")
- Cabinet width from **381** (15") to **1828** (72")
- Interior cabinet depth minimum of **278** (10-15/16")
- Closes silently and effortlessly with BLUMOTION
- Simple, virtually tool-free assembly and easy adjustment
- Optional: SERVO-DRIVE for AVENTOS

Warning: Risk of injury by spring-loaded lever arm!

- Do not push telescopic arm down
- Remove telescopic arm from mechanism before installing cabinet

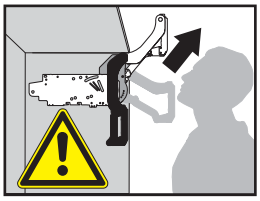

Step 1 – Determine the Required Hardware Based on Application

Find the required cabinet height in the first column. This will give you the required arm assembly.
Continue right in that row to find the mechanism that works for the weight of your door.

Example:
Cabinet height of **457** (18") = arm assembly 20L3800.06
Door weight of **10** lb 5 oz = lift mechanism 20L2500.N5

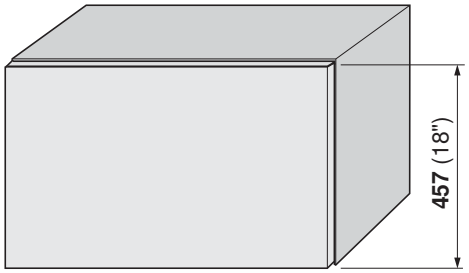

Door weight including handle = **10** lb 5 oz

Cabinet height	Min. opening required	Arm assembly	Lift mechanism (door weight – **lb**/oz)				
			20L2100.N5	20L2300.N5	20L2500.N5	20L2700.N5	20L2900.N5
11-13/16" – 13-3/4"	**262** (10-5/16")	20L3200.06	**2** /12 – **8** /7	**8** /8 – **13** /7	**13** /8 – **25** /4	**25** /5 – **44** /0	–
13-13/16" – 15-11/16"	**312** (12-5/16")	20L3500.06	**2** /12 – **4** /10	**4** /11 – **10** /2	**10** /3 – **18** /10	**18** /11 – **28** /4	**28** /5 – **44** /0
15-3/4" – 21-5/8"	**362** (14-1/4")	20L3800.06	–	**3** /13 – **6** /13	**6** /14 – **13** /11	**13** /12 – **24** /7	**24** /8 – **44** /0
17-11/16" – 22-13/16"	**412** (16-1/4")	20L3900.06	–	**2** /3 – **3** /4	**3** /5 – **10** /6	**10** /7 – **19** /3	**19** /4 – **36** /5

Step 2 – Select the Required Components

Lift mechanism set

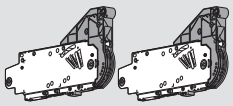

Set includes:

1 Lift mechanism (qty 2)

- #7 x **35** (1-3/8") wood screw (qty 10)

NOTE: It is recommended to use the more powerful lift mechanism for overlapping areas

	Part no.
	20L2100.N5
	20L2300.N5
	20L2500.N5
	20L2700.N5
	20L2900.N5

Cover set

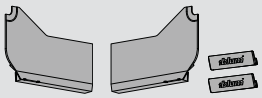

Set includes:

2 Right and left cover plate

3 Non-handed cover cap (qty 2)

NOTE: Light Gray, Dark Gray and Silk White options available

Light Gray (HGIG) Dark Gray (TGIG)

Silk White (SWIG)

	Part no.
Cover set	**20L8020.NA**

Arm assembly set

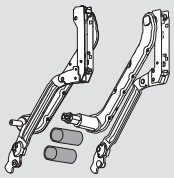

Set includes:

4 Right and left arm assembly

5 Stabilizer rod cover cap (qty 2)

NOTE: 20L3900.06 arm assembly recommened for appliance garage

Cabinet height range			Part no.
300 (11-13/16")	–	**349** (13-3/4")	**20L3200.06**
350 (13-13/16")	–	**399** (15-13/16")	**20L3500.06**
400 (15-3/4")	–	**550** (21-5/8")	**20L3800.06**
450 (17-11/16")	–	**580** (22-13/16")	**20L3900.06**

Oval stabilizer rod

6 Oval stabilizer rod

NOTE: Cabinets wider internally than 46.5" require an stabilizer rod connector set, see page 78

- Aluminum rod length 1061 (41-3/4"), cut to size
- Length = inside cabinet width minus 129 (5-1/16") for SERVO-DRIVE minus 164 (6-7/16")

	Part no.
Oval stabilizer rod	**20Q1061UA**

Wood or wide aluminum door hardware set

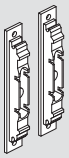

Set includes:

7 Arm assembly mounting plate (qty 2)

	Part no.
Wood or wide aluminum hardware set	**20S4200**
Installation screw for wood doors	**606N or 606P**
Installation screw for wide aluminum doors	**7072A**

Mounting plate with bracket set

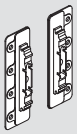

Set includes:

- Right and left mounting plate with bracket

For use with large overlay five-piece doors

	Part no.
Mounting plate with bracket set	**20S4F01**

SERVO-DRIVE for AVENTOS available, see page 82 for more information

AVENTOS HL Planning Specifications for Frameless and Face Frame

Frameless Application

Door and hardware clearance

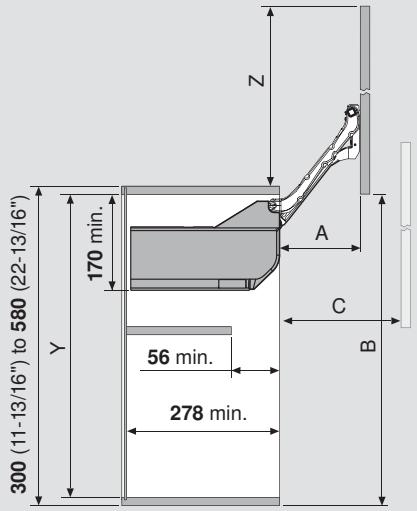

Face Frame Application

Door and hardware clearance

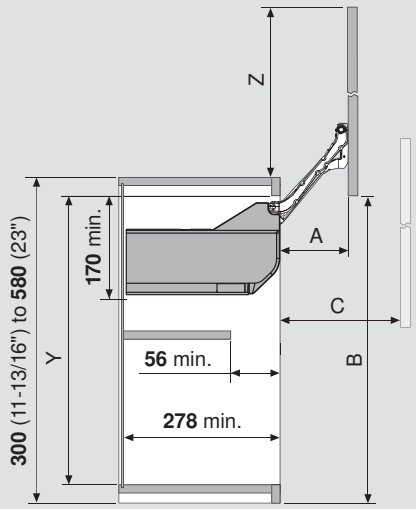

Arm assembly	Cabinet height range	Minimum Y	A	B	C	Z
20L3200.06	**300** (11-13/16") – **349** (13-3/4")	**262**	**114**	**257***	**159**	**264***
20L3500.06	**350** (13-13/16") – **399** (15-13/16")	**312**	**146**	**345***	**209**	**352***
20L3800.06	**400** (15-3/4") – **550** (21-5/8")	**362**	**178**	**433***	**259**	**440***
20L3900.06	**450** (17-11/16") – **580** (22-13/16")	**412**	**210**	**522***	**310**	**529***

*Based on top and bottom reveals of **0** – B and Z dimensions can be ±**15** due to range of adjustment, overpush and accuracy of installation

Bore for the locating pins

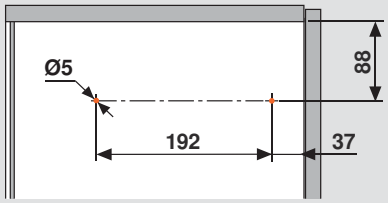

NOTE: Locating pin holes shown in orange

Bore for the locating pins

See page 89 for optional face frame mounting bracket or block-out side flush with frame.

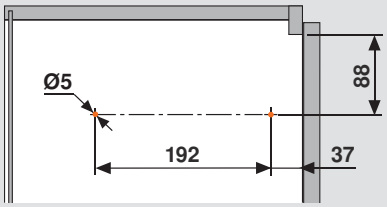

NOTE: Locating pin holes shown in orange

Lift mechanism clearance

*Clearance required for SERVO-DRIVE

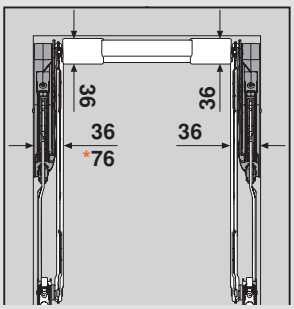

Lift mechanism positioning

Two locating pins fit into Ø**5** x **5** holes bored in the side of cabinet for proper positioning.

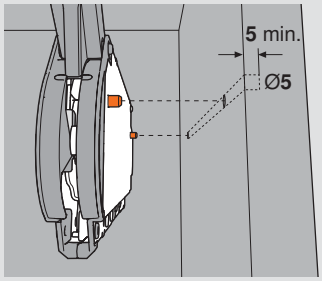

The included #7 x **35** (1-3/8") wood screws are required in the five holes marked in orange.

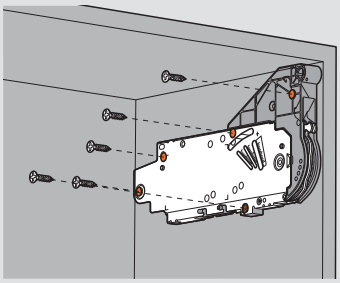

Arm assembly mounting plate location

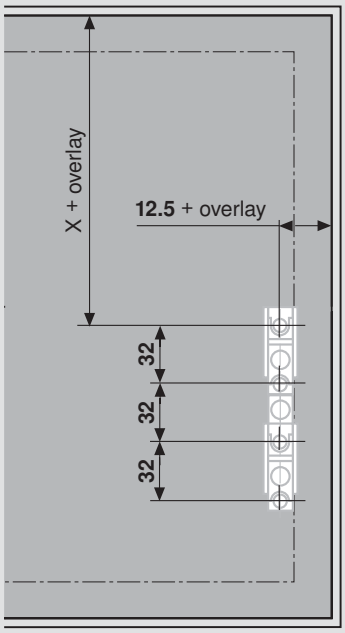

Minimum 5 side reveal when adjacent to wall

NOTE: Dimensions remain the same for frameless and face frame applications. Attach mounting plate with four 606N or 606P wood screw for wood doors or 7072A for wide aluminum doors

Arm assembly	X
20L3200.06	153
20L3500.06	203
20L3800.06	253
20L3900.06	303

Arm assembly mounting plate choices

Mounting plate

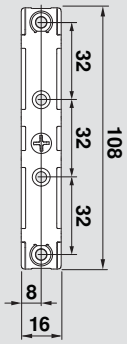

Slab door

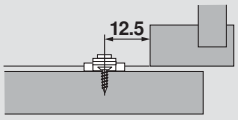

Five-piece door

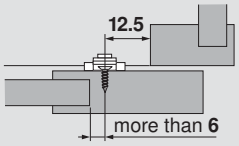

Mounting plate with bracket for large overlay five-piece doors

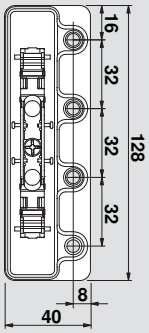

Five-piece door

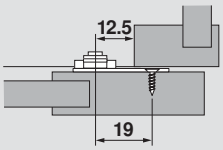

NOTE: Hole locations offset by **19** (example: **12.5** + overlay - **19** = hole location from side)

Door and Hardware Clearance

Decorative molding clearance

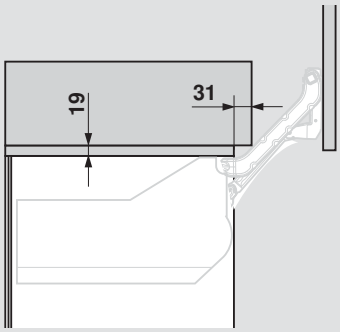

Follow the assembly instructions on page 42

AVENTOS HL Ordering Information for Narrow Aluminum

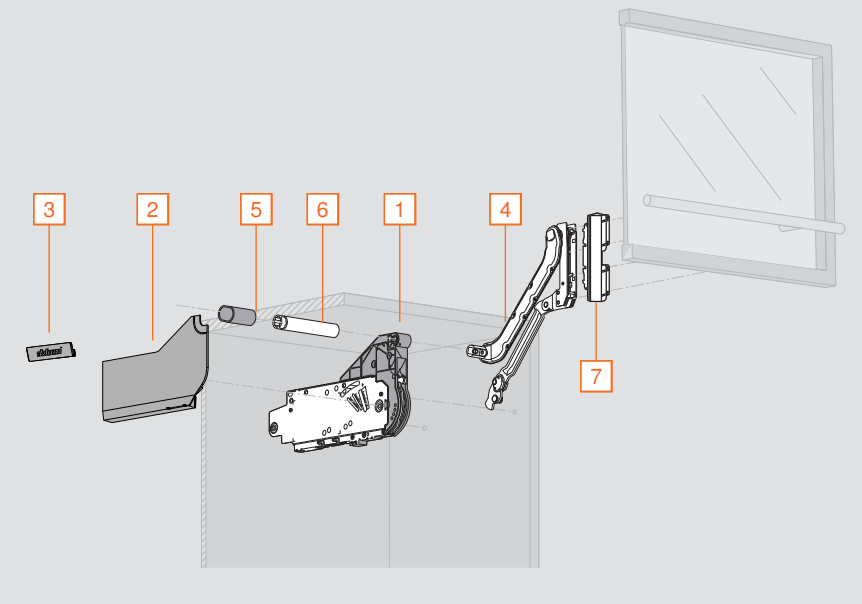

- Suited for wall cabinets and/or as an appliance garage application
- For both frameless and face frame applications
- Cabinet height from **300** (11-13/16") to **580** (22-13/16")
- Cabinet width from **381** (15") to **1828** (72")
- Interior cabinet depth minimum of **278** (10-15/16")
- Closes silently and effortlessly with BLUMOTION
- Simple, virtually tool-free assembly and easy adjustment
- Optional: SERVO-DRIVE for AVENTOS

Warning: Risk of injury by spring-loaded lever arm!

- Do not push telescopic arm down
- Remove telescopic arm from mechanism before installing cabinet

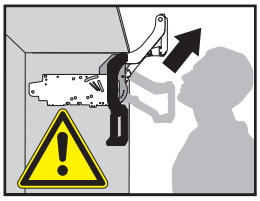

Step 1 – Determine the Required Hardware Based on Application

Find the required cabinet height in the first column. This will give you the required arm assembly.
Continue right in that row to find the mechanism that works for the weight of your door.

Example:
Cabinet height of **457** (18") = arm assembly 20L3800.06
Door weight of **10** lb 5 oz = lift mechanism 20L2500.N5

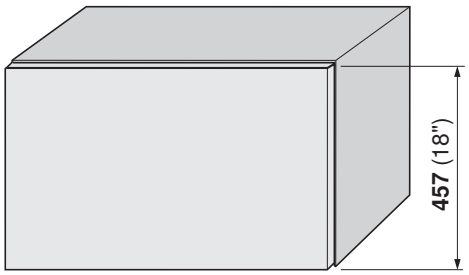

Door weight including handle = **10** lb 5 oz

Cabinet height	Min. opening required	Arm assembly	Lift mechanism (door weight – **lb**/oz)				
			20L2100.N5	20L2300.N5	20L2500.N5	20L2700.N5	20L2900.N5
11-13/16" – 13-3/4"	10-5/16"	20L3200.06	**2** /12 – **8** /7	**8** /8 – **13** /7	**13** /8 – **25** /4	**25** /5 – **44** /0	–
13-13/16" – 15-11/16"	12-5/16"	20L3500.06	**2** /12 – **4** /10	**4** /11 – **10** /2	**10** /3 – **18** /10	**18** /11 – **28** /4	**28** /5 – **44** /0
15-3/4" – 21-5/8"	14-1/4"	20L3800.06	–	**3** /13 – **6** /13	**6** /14 – **13** /11	**13** /12 – **24** /7	**24** /8 – **44** /0
17-11/16" – 22-13/16"	16-1/4"	20L3900.06	–	**2** /3 – **3** /4	**3** /5 – **10** /6	**10** /7 – **19** /3	**19** /4 – **36** /5

Step 2 – Select the Required Components

Lift mechanism set

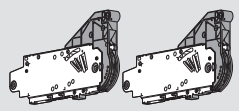

Set includes:

1 Lift mechanism (qty 2)

- #7 x 35 (1-3/8") wood screw (qty 10)

NOTE: It is recommend to use the more powerful lift mechanism for overlapping areas

	Part no.
	20L2100.N5
	20L2300.N5
	20L2500.N5
	20L2700.N5
	20L2900.N5

Cover set

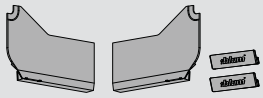

Set includes:

2 Right and left cover plate

3 Non-handed cover cap (qty 2)

NOTE: Light Gray, Dark Gray and Silk White options available

- Light Gray (HGIG)
- Dark Gray (TGIG)
- Silk White (SWIG)

	Part no.
Cover set	**20L8020.NA**

Arm assembly set

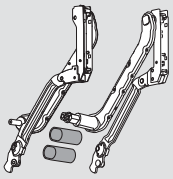

Set includes:

4 Right and left arm assembly

5 Stabilizer rod cover cap (qty 2)

Cabinet height range	Part no.
300 (11-13/16") – **349** (13-3/4")	**20L3200.06**
350 (13-13/16") – **399** (15-13/16")	**20L3500.06**
400 (15-3/4") – **550** (21-5/8")	**20L3800.06**
450 (17-11/16") – **580** (22-13/16")	**20L3900.06**

Oval stabilizer rod

6 Oval stabilizer rod

NOTE: Cabinets wider internally than 46.5" require a stabilizer rod connector set, see page 78

- Aluminum rod length **1061** (41-3/4"), cut to size
- Length = inside cabinet width minus 129 (5-1/16") for SERVO-DRIVE minus **164** (6-7/16")

	Part no.
Oval stabilizer rod	**20Q1061UA**

Narrow aluminum door hardware set

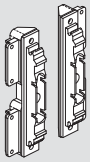

Set includes:

- Narrow aluminum arm mounting plate (qty 2)

7 699.110 – Aluminum screw for narrow aluminum lever arm mounting plate (qty 8)

	Part no.
Narrow aluminum hardware set	**20S4200A**

SERVO-DRIVE for AVENTOS available, see page 82 for more information

AVENTOS HL Planning Specifications for Narrow Aluminum

Frameless Application

Door and hardware clearance

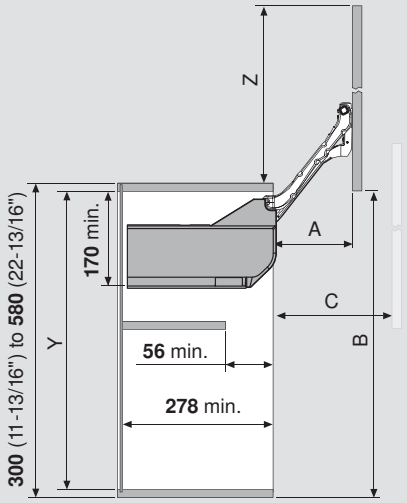

Arm assembly	Cabinet height range	Minimum Y	A	B	C	Z
20L3200.06	**300** (11-13/16") – **349** (13-3/4")	**262**	**114**	**257***	**159**	**264***
20L3500.06	**350** (13-13/16") – **399** (15-13/16")	**312**	**146**	**345***	**209**	**352***
20L3800.06	**400** (15-3/4") – **550** (21-5/8")	**362**	**178**	**433***	**259**	**440***
20L3900.06	**450** (17-11/16") – **580** (22-13/16")	**412**	**210**	**522***	**310**	**529***

*Based on top and bottom reveals of **0** – B and Z dimensions can be ±**15** due to range of adjustment, overpush and accuracy of installation

Bore for the locating pins

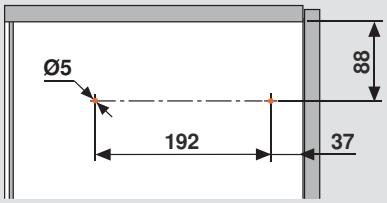

NOTE: Locating pin holes shown in orange

Lift mechanism clearance

*Clearance required for SERVO-DRIVE

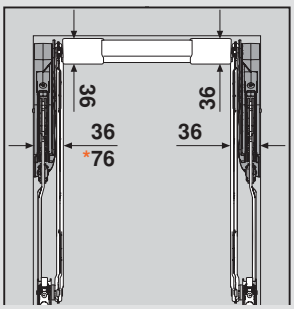

Lift mechanism positioning

Two locating pins fit into Ø**5** x **5** holes bored in the side of cabinet for proper positioning.

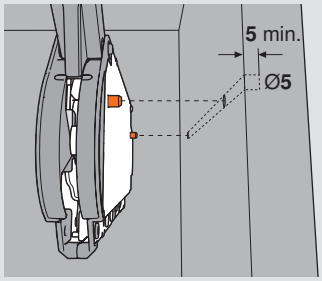

The included #7 x **35** (1-3/8") wood screws are required in the five holes marked in orange.

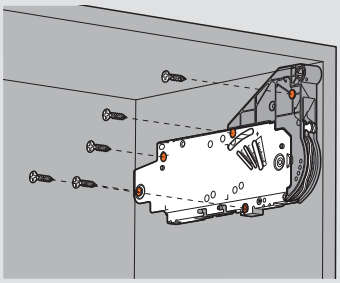

Arm assembly mounting plate location

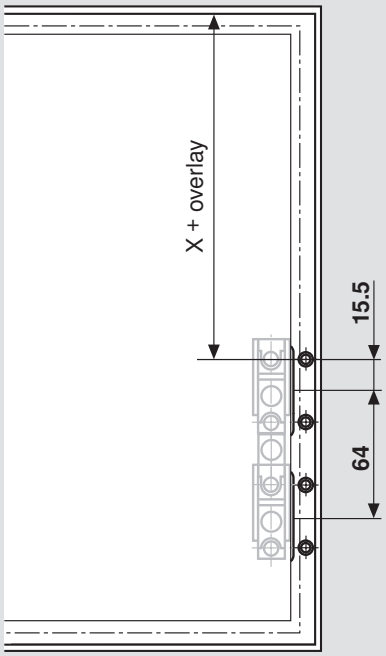

Minimum **5** side reveal when adjacent to wall

NOTE: Attach mounting plate with four 699.110 screws provided

Arm assembly	X
20L3200.06	**153**
20L3500.06	**203**
20L3800.06	**253**
20L3900.06	**303**

Hinge and mounting plate attachment

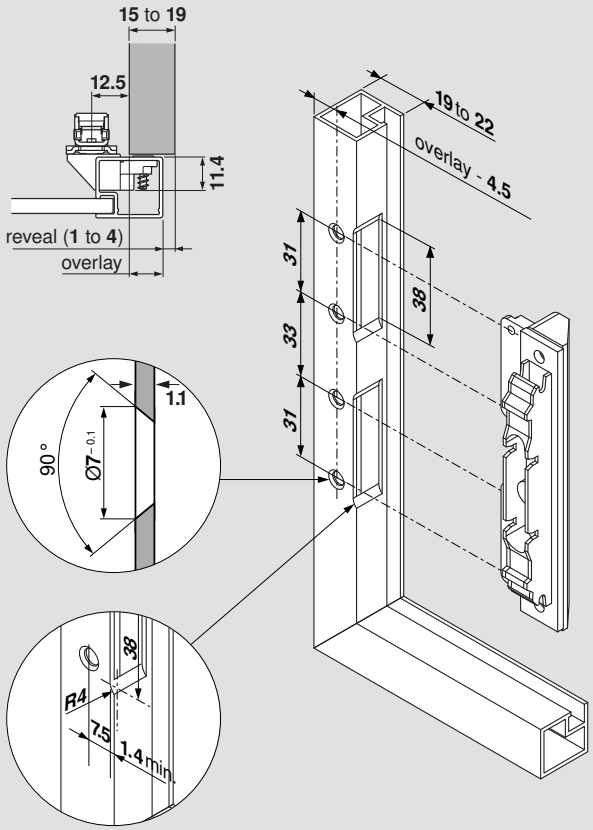

NOTE: When changing material thickness, adjust assembly dimensions accordingly

Door and Hardware Clearance

Decorative molding clearance

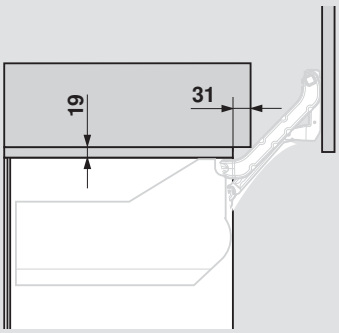

Follow the assembly instructions on page 42

Attaching the arm assembly

Find the right and left arm assemblies and match them to the correct side of the cabinet.

1 Attach the arm assembly to the lift mechanism as shown

2 Lift up on the arm assembly to lock into place

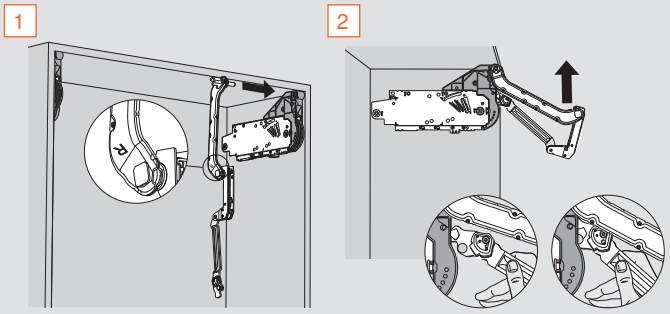

Removing the arm assembly

1 Insert screw driver behind notch in locking cam and pry outward

2 Remove arm assembly as shown

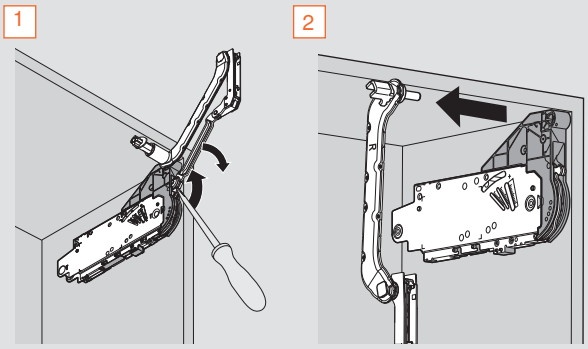

Attaching the stabilizer rod

Cut the stabilizer rod to fit the cabinet. Length = interior cabinet width minus **129** (5-1/16").
After cutting the rod to size follow steps 1, 2, and 3 below.

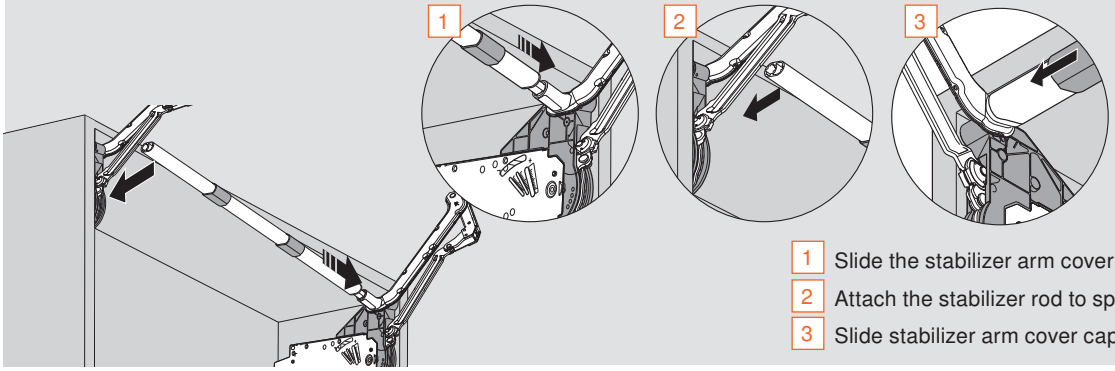

1 Slide the stabilizer arm cover caps onto the rod

2 Attach the stabilizer rod to spring loaded arm assembly

3 Slide stabilizer arm cover caps over rod on each end

Attaching AVENTOS HL doors

Attach the door using the CLIP mechanism to the arm assembly.

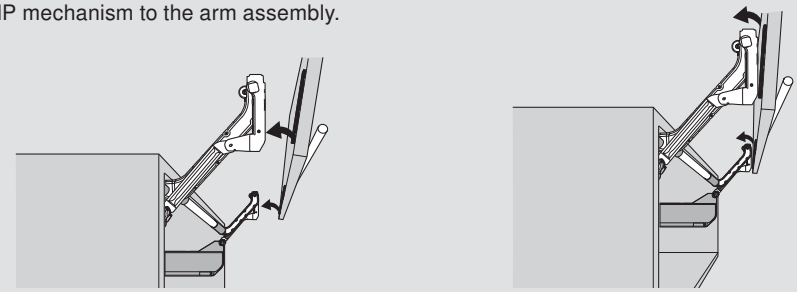

Warning: Risk of injury by spring-loaded arm assembly!

- Do not push telescopic arm down
- Remove telescopic arm from mechanism before installing cabinet

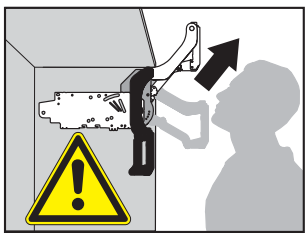

Adjusting the lift mechanism

Use a screw gun and a #2 x 2 POZI driver bit to adjust the lift mechanism to the desired tension (door weight balanced).

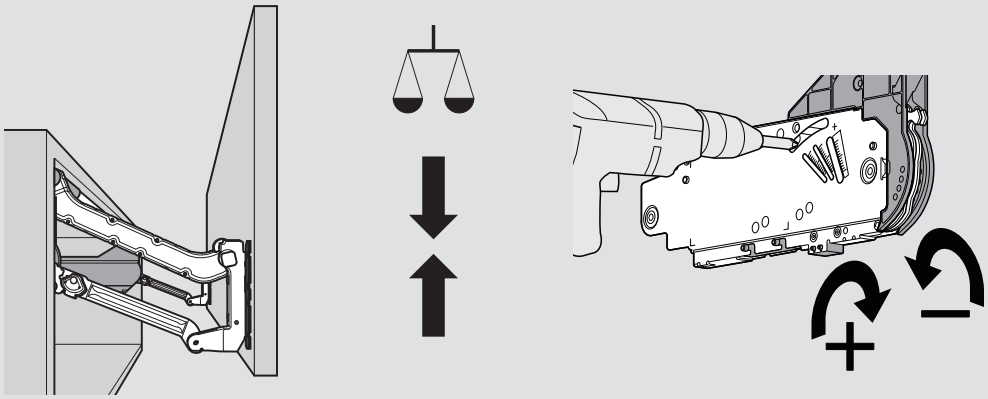

AVENTOS HL door adjustments

Use a POZI screwdriver to adjust cam adjustments for each of the three-dimensional door adjustments.

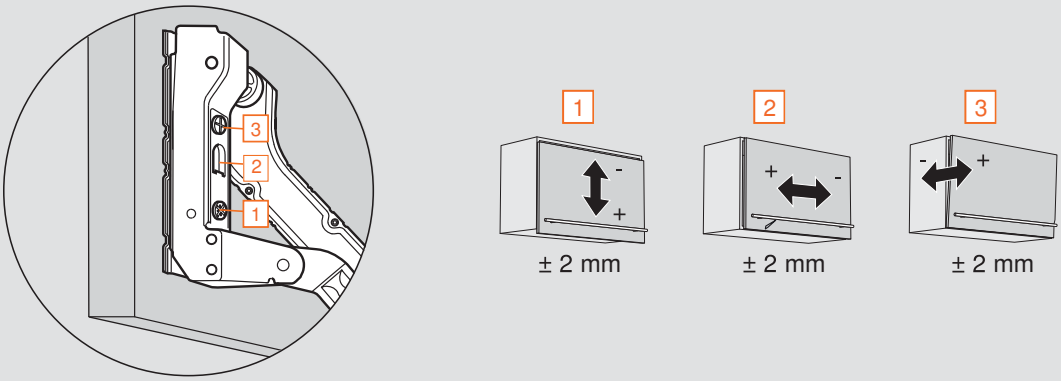

Attaching cover caps

Place the left and right cover plates over the appropriate lift mechanisms and snap them in place.

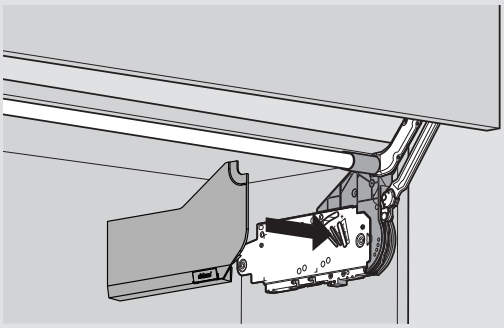

AVENTOS HK-S

Stay Lift for the Smallest of Cabinets

AVENTOS HK-S program has only three lift mechanisms and covers all common door widths and heights. This simplifies planning, ordering and warehousing.

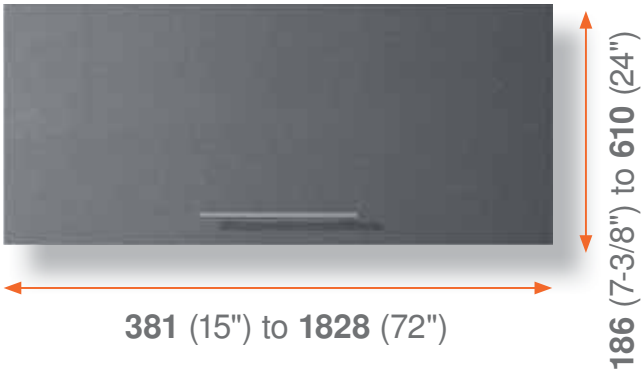

Numerous Design Options

AVENTOS HK-S can be used in small wall cabinets, above a refrigerator or in a pantry.

Easy Installation and Adjustment

The three-dimensional adjustment feature enables doors to be precisely aligned during installation and tolerances to be maintained with ease.

The Motion Inside

The amount of technology and components placed into each lift mechanism are what provide the unparalleled smooth operation of AVENTOS.

AVENTOS HK-S Ordering Information for Frameless and Face Frame

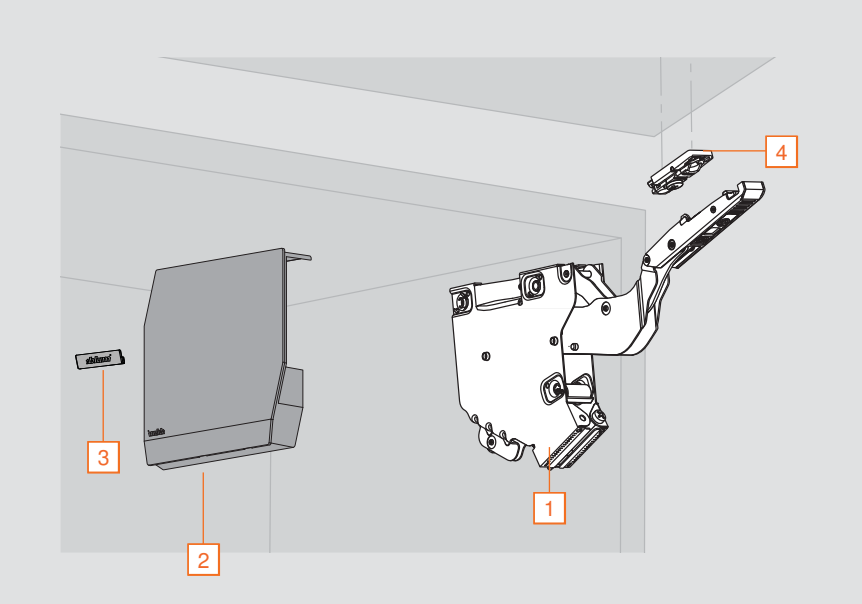

- Suited for wall cabinets and/or above a pantry or refrigerator
- For both frameless and face frame applications
- Cabinet height from **186** (7-3/8") to **610** (24")*
- Cabinet width from **381** (15") to **1828** (72")*
- Interior cabinet depth minimum of **165** (6-1/2")
- Closes silently and effortlessly with BLUMOTION
- Simple, virtually tool-free assembly and easy adjustment
- No hinges required
- Optional: TIP-ON for AVENTOS

*Dependent on power factor

Warning: Risk of injury by spring-loaded lever arm!

- Do not push telescopic arm down
- Remove telescopic arm from mechanism before installing cabinet

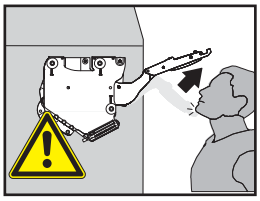

Step 1 – Determine the Power Factor for the Application

Power factor = cabinet height (inch) x door weight* (lb)

Determine power factor

To select the correct lift mechanism for a given application, the power factor must first be calculated by using the formula below.
Use the table at the bottom of the page to convert ounces into decimal form for easy calculation.

Power factor = cabinet height multiplied by door weight*

Example:
Cabinet height: 9" (within possible range)
Door weight including twice the handle weight = 5 lb 14 oz (14 oz = .9 lb see chart below)

Power factor = 9 x 5.9
Power factor = 53.1

A power factor of 53.1 requires lift mechanism 20K2C00.N1

*Including twice the handle weight

NOTE: AVENTOS planning tools available at blum.com/configurator

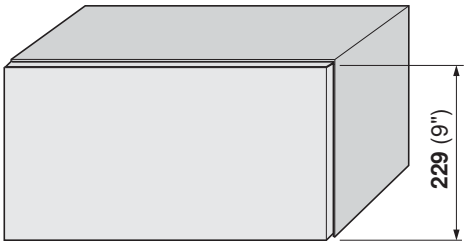

Door weight + twice handle weight = **5** lb 14 oz

Weight conversion chart															
oz	1	2	3	4	5	6	7	8	9	10	11	12	13	14	15
lb	.1	.1	.2	.3	.3	.4	.4	.5	.6	.6	.7	.8	.8	.9	.9

Step 2 – Select the Required Components

Lift mechanism set

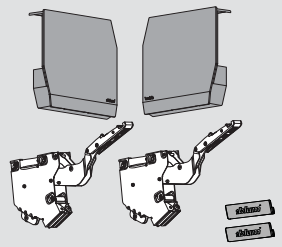

Set includes:

1. Lift mechanism (qty 2)
2. Cover plate (left and right)
3. Non-handed cover caps (qty 2)

- #7 x **35** (1-3/8") wood screw (qty 6)

NOTE: It is recommended to use the more powerful lift mechanism for overlapping areas

NOTE: Light Grey, Dark Gray and Silk White options available

- Light Gray (HGIG)
- Dark Gray (TGIG)
- Silk White (SWIG)

Power factor range	Opening angle	Part no.
19 – 39	107°	**20K2B00.N6**
40 – 85	107°	**20K2C00.N6**
86 – 177	107°	**20K2E00.N6**

NOTE: 20K2B00.N1 unit contains 1x 20K2A00.N1 (unsprung - no tension adjustment) and 1x 20K2C00.N1

Wood or wide aluminum door mounting plate set

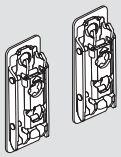

Set Requires:

4. Wood or wide aluminum arm assembly mounting plate (qty 2)

	Part no.
Wood or wide aluminum mounting plate	**175H3100**
Installation screw for wood doors	**606N or 606P**
Installation screw for wide aluminum doors	**7072A**

Mounting plate with bracket set

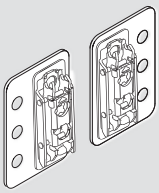

Set includes:

- Right and left mounting plate with bracket

For use with large overlay five-piece doors

	Part no.
Mounting plate with bracket set	**175H3F00**

AVENTOS HK-S Planning Specifications for Frameless and Face Frame

Frameless Application

Door and hardware clearance

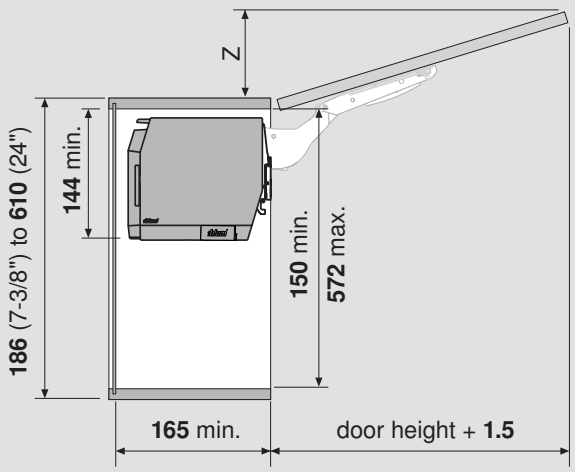

Z = door height x .29 minus **15** + door thickness

Bore for the locating pins

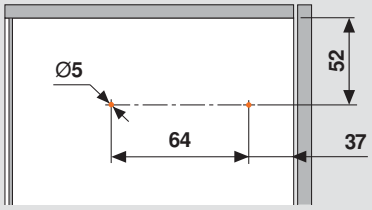

NOTE: Locating pin holes shown in orange

Face Frame Application

Door and hardware clearance

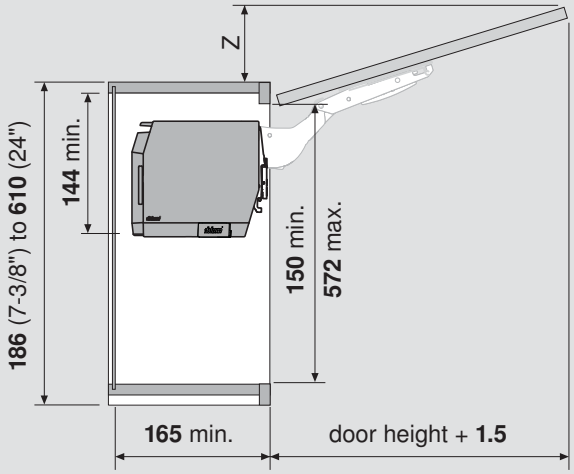

Z = door height x .29 minus **15** + door thickness

Bore for the locating pins

See **page 75** for optional face frame mounting bracket or block-out side flush with frame.

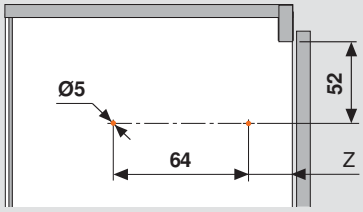

NOTE: Locating pin holes shown in orange

overlay	up to **20**	**24**	**26**
Z	**37**	**35.5**	**34.5**

Lift mechanism clearance

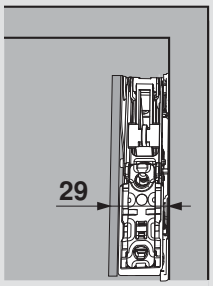

Lift mechanism positioning

Two locating pins fit into Ø**5** x **5** holes bored in the side of cabinet for proper positioning.

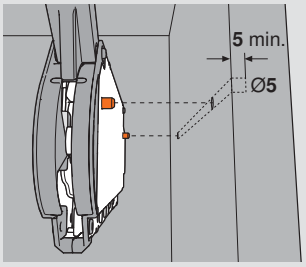

The included #7 x **35** (1-3/8") wood screws are required in the three holes marked in orange.

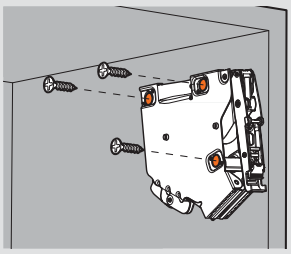

Refer to page 74 for angle restriction clip options

Arm assembly mounting plate location

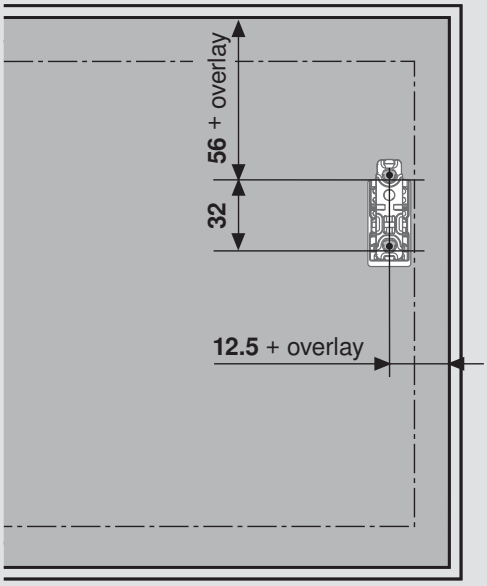

NOTE: Attach mounting plate with four 606N or 606P wood screw for wood doors or 7072A for wide aluminum doors

Arm assembly mounting plate choices

Mounting plate

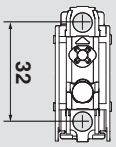

Slab door

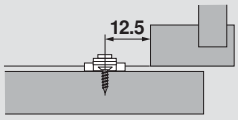

Five-piece door

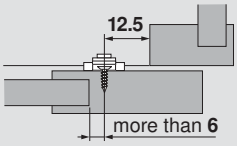

Mounting plate with bracket for large overlay five-piece doors

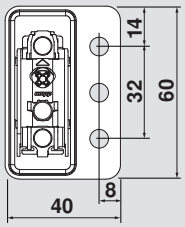

Five-piece door

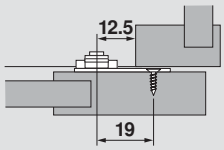

NOTE: Hole locations offset by **19** (example: **12.5** + overlay - **19** = hole location from side)

Door and Hardware Clearance

Minimum gap

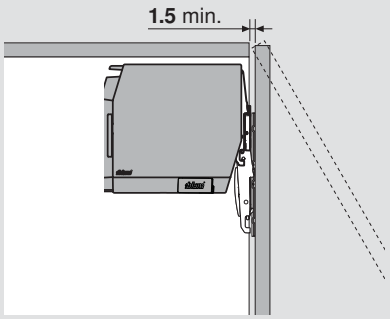

NOTE: Min gap assumes door radius of **1**

Overlay	up to **20**	**24**	**26**
gap	**1.5**	**2.5**	**4**

Decorative molding clearance

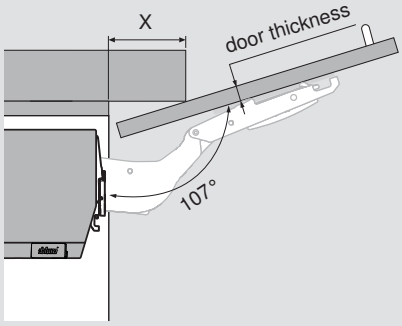

Door thickness	16	**19**	**22**	**26**
maximum X	**70**	**59**	**49**	**35**

Minimum bottom reveal

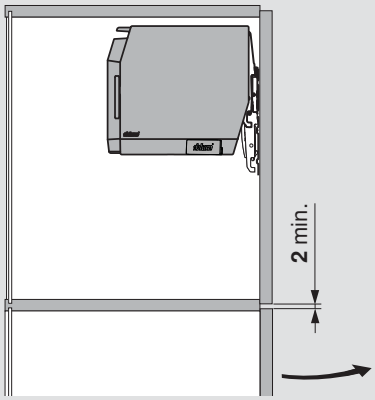

Follow the assembly instructions on page 62

AVENTOS HK-S Ordering Information for Narrow Aluminum

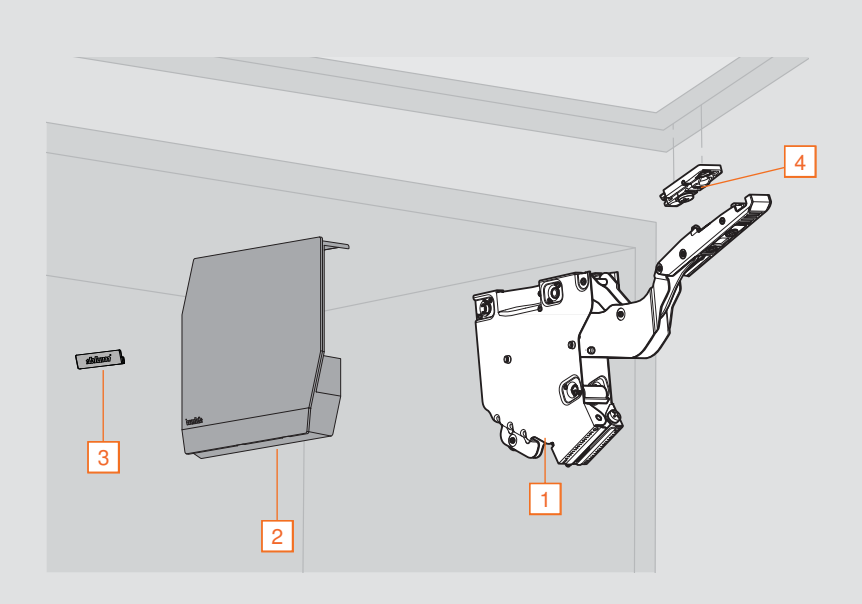

- Suited for wall cabinets and/or above a pantry or refrigerator
- For both frameless and face frame applications
- Cabinet height from **186** (7-3/8") to **610** (24")*
- Cabinet width from **381** (15") to **1828** (72")*
- Interior cabinet depth minimum of **165** (6-1/2")
- Closes silently and effortlessly with BLUMOTION
- Simple, virtually tool-free assembly and easy adjustment
- Optional: TIP-ON for AVENTOS

*Dependent on power factor

Warning: Risk of injury by spring-loaded lever arm!

- Do not push telescopic arm down
- Remove telescopic arm from mechanism before installing cabinet

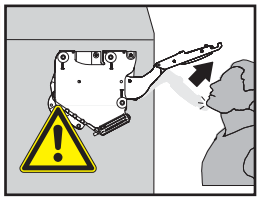

Step 1 – Determine the Power Factor for the Application

Power factor = cabinet height (inch) x door weight* (lb)

Determine power factor

To select the correct lift mechanism for a given application, the power factor must first be calculated by using the formula below.
Use the table at the bottom of the page to convert ounces into decimal form for easy calculation.

Power factor = cabinet height multiplied by door weight*

Example:
Cabinet height: 9" (within possible range)
Door weight including twice the handle weight = 5 lb 14 oz (14 oz = .9 lb see chart below)

Power factor = 9 x 5.9
Power factor = 53.1

A power factor of 53.1 requires lift mechanism 20K2C00.N1

*Including twice the handle weight

NOTE: AVENTOS planning tools available at blum.com/configurator

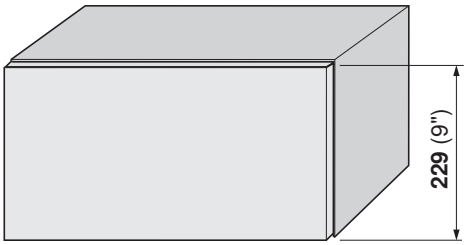

Door weight + twice handle weight = **5** lb 14 oz

Weight conversion chart															
oz	1	2	3	4	5	6	7	8	9	10	11	12	13	14	15
lb	.1	.1	.2	.3	.3	.4	.4	.5	.6	.6	.7	.8	.8	.9	.9

Step 2 – Select the Required Components

Lift mechanism set

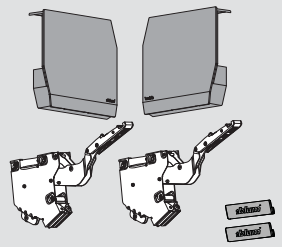

Set includes:

1. Lift mechanism (qty 2)
2. Right and left cover plate
3. Non-handed cover caps (qty 2)

- #7 x **35** (1-3/8") wood screw (qty 6)

NOTE: It is recommended to use the more powerful lift mechanism for overlapping areas

NOTE: Light Gray, Dark Gray and Silk White options available

- Light Gray (HGIG)
- Dark Gray (TGIG)
- Silk White (SWIG)

Power factor range	Opening angle	Part no.
19 – 39	107°	**20K2B00.N6**
40 – 85	107°	**20K2C00.N6**
86 – 177	107°	**20K2E00.N6**

NOTE: 20K2B00.N1 unit contains 1x 20K2A00.N1 (unsprung - no tension adjustment) and 1x 20K2C00.N1

Narrow aluminum door mounting plate

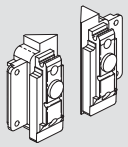

Set includes:

4. Narrow aluminum arm assembly mounting plate (qty 2)

- 699.110 – Aluminum screw for mounting plate attachment (qty 4)

	Part no.
Narrow aluminum door mounting plate	**20K4A00A02**

Door and Hardware Clearance and Positioning

Door and hardware clearance

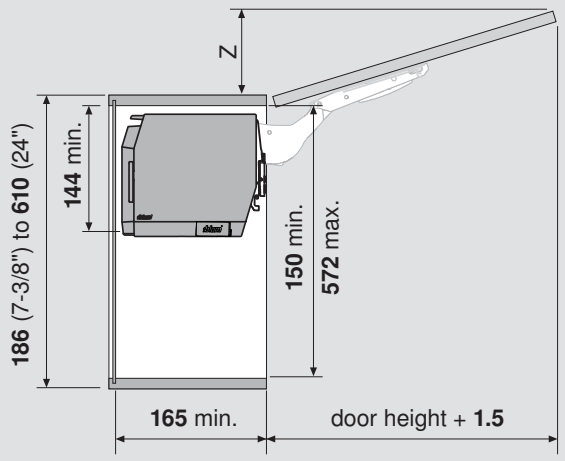

Z = door height x .29 minus **15** + door thickness

Bore for the locating pins

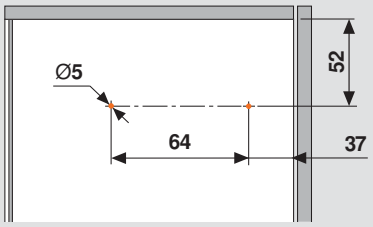

NOTE: Locating pin holes shown in orange

Lift mechanism clearance

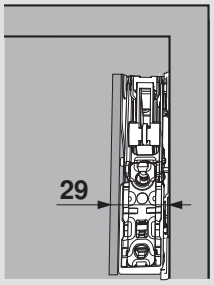

Lift mechanism positioning

Two locating pins fit into Ø**5** x **5** holes bored in the side of cabinet for proper positioning.

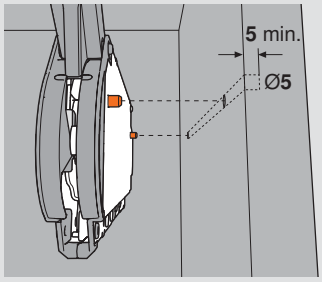

The included #7 x **35** (1-3/8") wood screws are required in the three holes marked in orange.

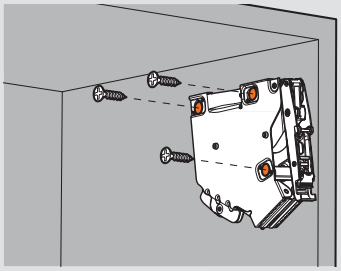

Telescopic arm mounting plate location

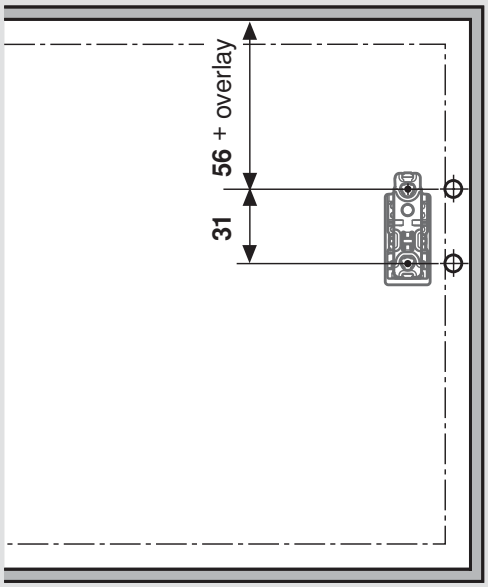

NOTE: Attach mounting plate with two 699.110 aluminum screws

Hinge and mounting plate attachment

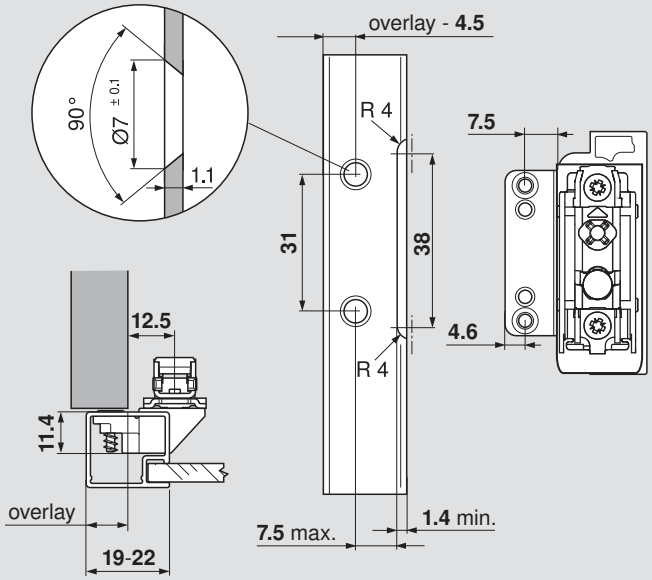

NOTE: When changing material thickness, adjust assembly dimensions accordingly

Door and Hardware Clearance

Minimum gap

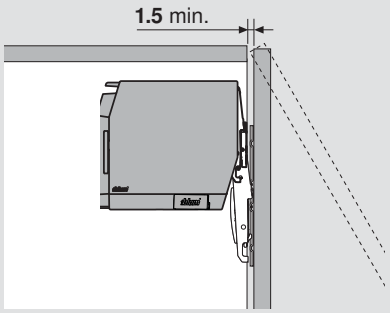

NOTE: Min gap assumes door radius of **1**

Decorative molding clearance

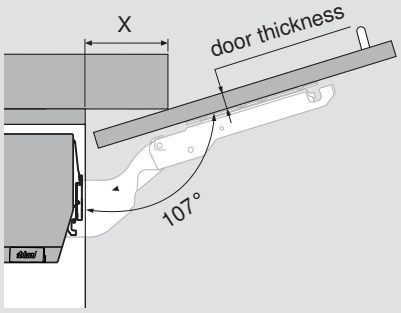

Door thickness	16	19	22	26
maximum X	**70**	**59**	**49**	**35**

Minimum bottom reveal

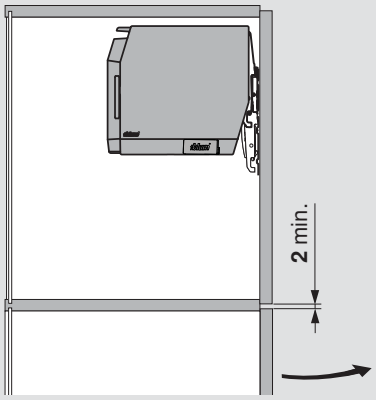

Follow the assembly instructions on page 62

AVENTOS HK-S Ordering Information for TIP-ON

Lift mechanism set

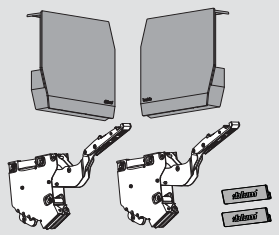

Set includes:
- Lift mechanism (qty 2)
- Right and left cover plate
- Non-handed cover caps (qty 2)
- #7 x **35** mm (1-3/8") wood screw (qty 6)

Power factor	Opening angle	Part no.
19 – 39	107°	**20K2B00TN6**
40 – 85	107°	**20K2C00TN6**
86 – 177	107°	**20K2E00TN6**

NOTE: 20K2B00.N1 unit contains 1x 20K2A00.N1 (unsprung - no tension adjustment) and 1x 20K2C00.N1

Wood or wide aluminum door hardware set

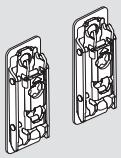

Set includes:
- Arm assembly mounting plate (qty 2)

	Part no.
Wood or wide aluminum hardware set	**175H3100**
Installation screw for wood doors	**606N or 606P**
Installation screw for wide aluminum doors	**7072A**

NOTE: Refer to page 48-49 for installation specifications

Narrow aluminum door hardware set

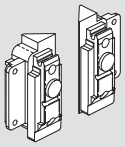

Set includes:
- Arm assembly mounting plate (qty 2)
- 699.110 – Aluminum screw for mounting plate attachment (qty 4)

	Part no.
Narrow aluminum door hardware set	**20K4A00A02**

NOTE: Refer to page 52-53 for installation specifications

Refer to page 74 for angle restriction clip options

TIP-ON set for standard doors

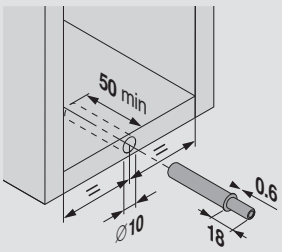

- White
- Gray
- Black

Use of screw-on catch plate required for all applications

- Nylon gray unit with magnet tip
- Adjustment range +**4** mm to -**1** mm
- For door heights up to **400** (15-3/4")
- Works for overlay and inset applications
- Can be bored into the panel or used with an adapter plate

Set includes:

- TIP-ON unit
- Self-adhesive catch plate
- Screw-on catch plate
- Wood screw

NOTE: Due to various door weights and sizes, trial application recommended

	Part no.
Standard door set	**956.1004**

TIP-ON set for large doors

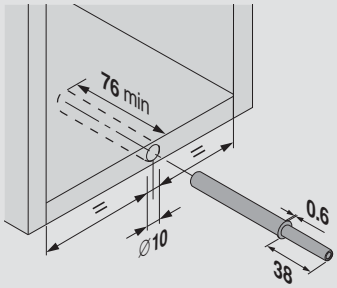

- White
- Gray
- Black

Use of screw-on catch plate required for all applications

- Nylon gray unit with magnet tip
- Adjustment range +**4** mm to -**1** mm
- For door heights greater than **400** (15-3/4")
- Works for overlay and inset applications
- Can be bored into the panel or used with an adapter plate

Set includes:

- TIP-ON unit
- Self-adhesive catch plate
- Screw-on catch plate
- Wood screw

NOTE: Due to various door weights and sizes, trial application recommended

	Part no.
Large door set	**956A1004**

TIP-ON for AVENTOS specifications

Standard doors

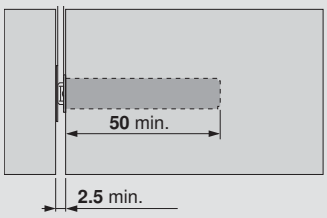

Large doors

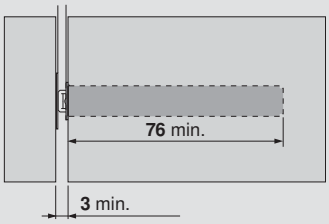

Screw-on catch plate specifications

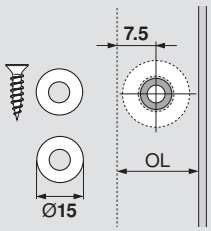

Pre-boring Ø**2.5** countersunk pilot holes are required

For adapter plate mounting please refer to the Concealed hinges brochure

Remove transport tab

1 Carefully remove the transport tab.

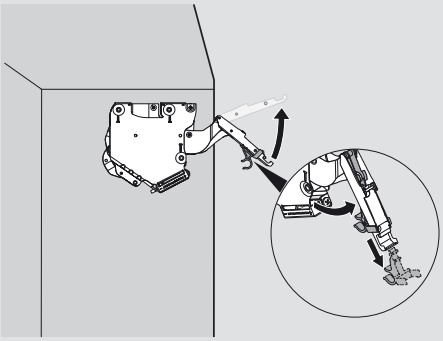

2 Slowly raise the arm to the upright position.

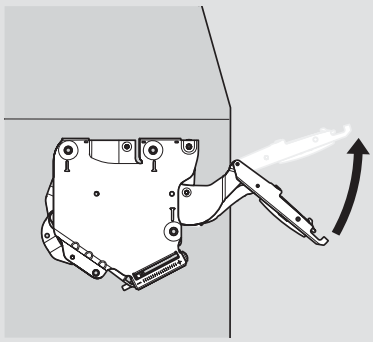

NOTE: Do not remove transport tab until just before attaching the door

Attaching AVENTOS HK-S doors

Attach the door using the CLIP mechanism to the arm assembly.

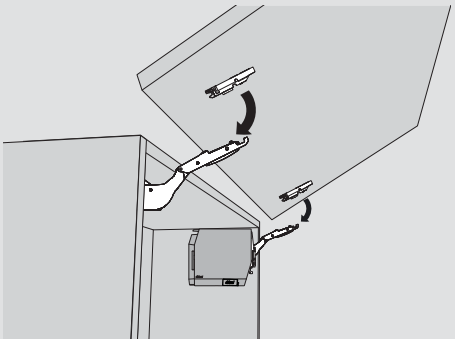

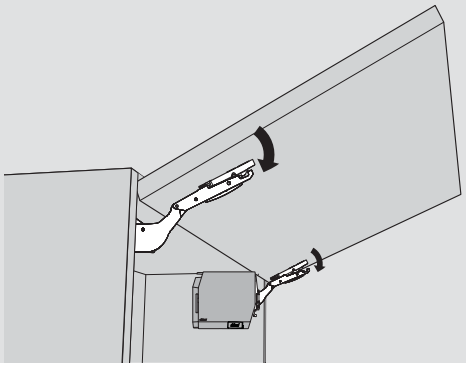

Adjust the lift mechanism

Use a screw gun and a #2 x 2 POZI driver bit to adjust the lift mechanism to the desired tension (door weight balanced).

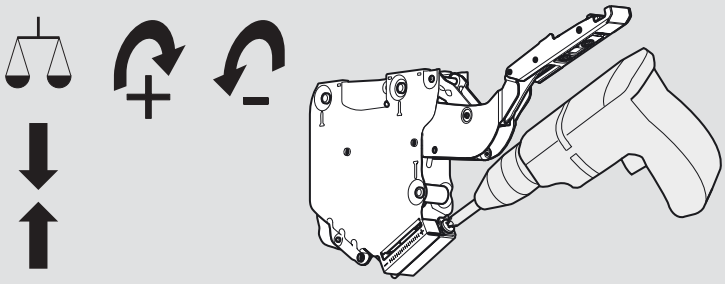

Warning: Risk of injury by spring-loaded lever arm!

- Do not push telescopic arm down
- Remove telescopic arm from mechanism before installing cabinet

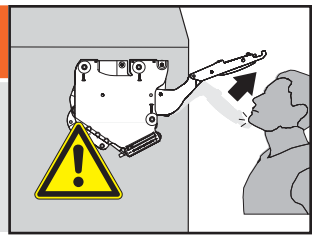

AVENTOS HK-S door adjustments

Use a POZI screwdriver to adjust cam adjustments for each of the three-dimensional door adjustments.

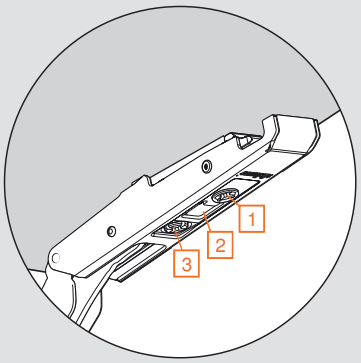

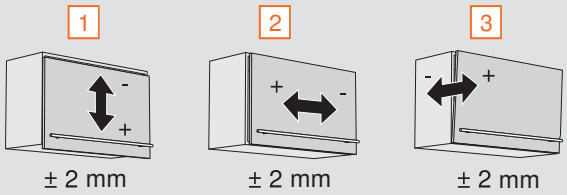

Attaching cover caps

Place the left and right cover plates over the appropriate lift mechanisms and snap them in place.

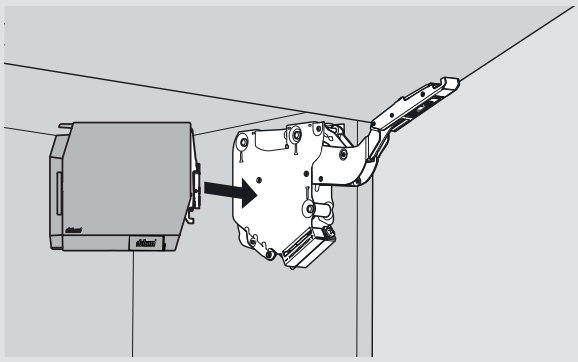

Removing the arm assembly

1 Insert screw driver behind notch in locking cam and pry outward

2 Remove arm assembly as shown

1

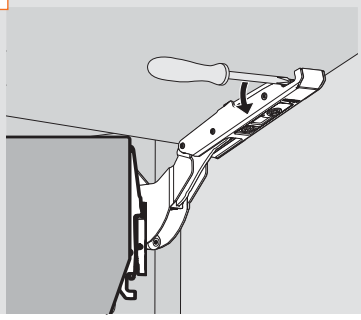

2

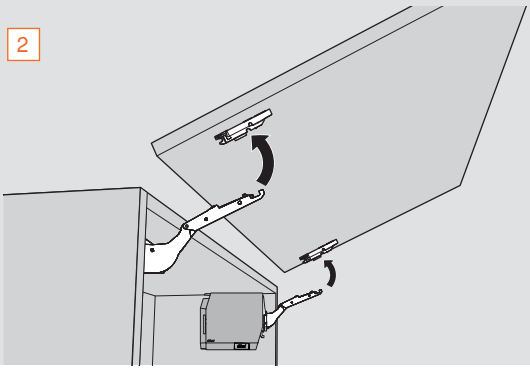

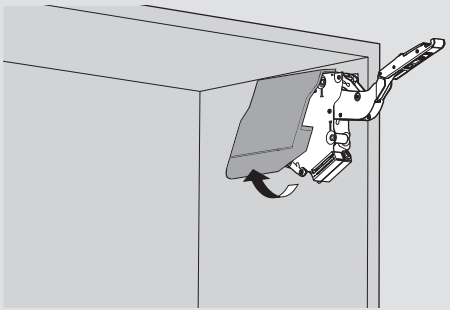

AVENTOS HK-XS

Smaller, Cost-Effective Lift System

The design of the AVENTOS HK-XS means that cabinets with small internal depths can be equipped easily. The symmetrical lift mechanism can be used on one or both sides, for the widest range of applications and design freedom.

Numerous Design Options

For wider or heavier fronts, a lift mechanism should be added to both sides of the cabinet.

Versatility

AVENTOS HK-XS allows you the design freedom for all areas of the home, whether it's the kitchen, living room or bathroom.

The Motion Inside

The lift mechanism with a robust spring package is the core element of this design. This allows the AVENTOS HK-XS to provide a high level of stability and durability.

AVENTOS

AVENTOS HK-XS Ordering Information for Frameless and Face Frame

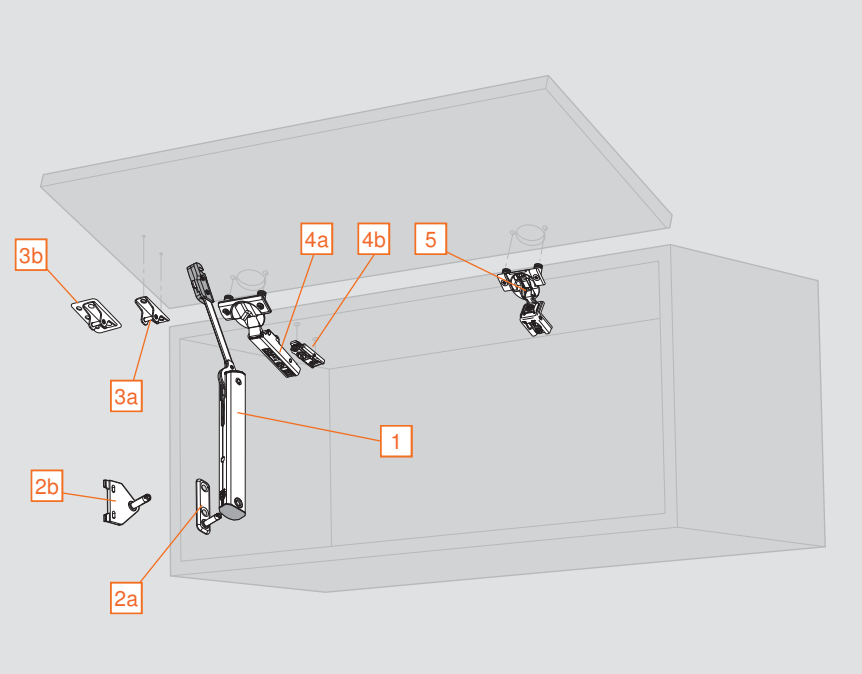

- Well suited for small wall cabinets
- Cabinet height from **238** (9-3/8") to **610** (24")
- Cabinet width up to **1828** (72")*
- Interior cabinet depth minimum of **127** (5")
- Closes silently and effortlessly with CLIP top BLUMOTION or COMPACT BLUMOTION hinges
- Simple, virtually tool-free assembly and easy adjustment
- Symmetrical lift mechanism – can be used on one or both sides
- Designed for use with BLUMOTION hinges
- Optional: TIP-ON for AVENTOS

*Dependent on power factor

Step 1 – Determine the Power Factor for the Application

Power factor = cabinet height (inch) x door weight* (lb)

Determine power factor

To select the correct lift mechanism for a given application, the power factor must first be calculated by using the formula below.
Use the table at the bottom of the page to convert ounces into decimal form for easy calculation.

Power factor = cabinet height multiplied by door weight*

Example:
Cabinet height: 15" (within possible range)
Door weight including twice the handle weight = 9 lb 14 oz (14 oz = .9 lb see chart below)

Power factor = 15 x 9.9
Power factor = 148.5

A power factor of 148.5 requires lift mechanism 20K1501

*Including twice the handle weight

NOTE: AVENTOS planning tools available at blum.com/configurator

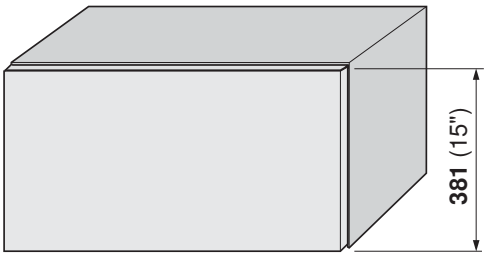

Door weight + twice handle weight = **9** lb 14 oz

Weight conversion chart															
oz	1	2	3	4	5	6	7	8	9	10	11	12	13	14	15
lb	.1	.1	.2	.3	.3	.4	.4	.5	.6	.6	.7	.8	.8	.9	.9

Step 2 – Select the Required Components

Lift mechanism

1

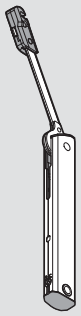

Power factor range (1 lift)	Power factor range (2 lifts)	Part no.
17 – 60	34 – 120	**20K1101**
61 – 112	121 – 224	**20K1301**
113 – 156	225 – 312	**20K1501**

Cabinet mounting plate

2a

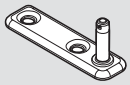

Frameless	Part no.
Screw-on	**20K5101**
EXPANDO (Ø**5** dowel)	**20K51E1**

2b

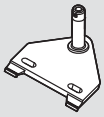

Face frame	Part no.
Screw-on	**20K5501**

Door mounting plate

3a

	Part no.
Screw-on	**20K4101**

3b

NOTE: For use with large overlay five-piece doors	Part no.
Screw-on	**20K4501**

Hinge recommendations

4a

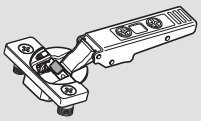

4b

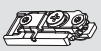

CLIP top BLUMOTION 110°	Part no.
Press-in	**71B3580**
Hinge mounting plate	Part no.
EXPANDO (Ø**5** dowel)	**177H3100E**

NOTE: For other hinges and mounting plate options please refer to the Concealed hinges brochure

5

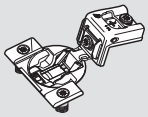

COMPACT BLUMOTION 39C	Part no.
32 (1-1/4") Overlay, Press-in	**39C358B.20**
COMPACT BLUMOTION 38N	Part no.
13 (1/2") Overlay, Press-in	**38N358B.08**

AVENTOS

AVENTOS HK-XS Planning Specifications for Frameless and Face Frame

CLIP top Frameless Application

Lift mechanism

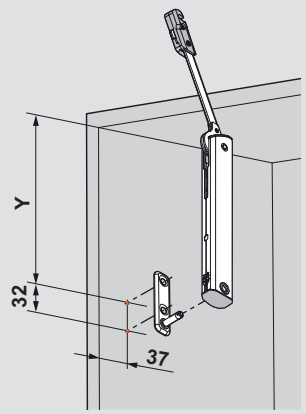

Y = 137 + D + K

Door mounting plate

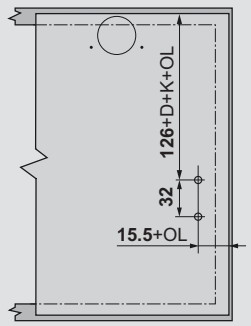

Attach using #6 x 5/8" (606N/P) wood screw

Space requirements

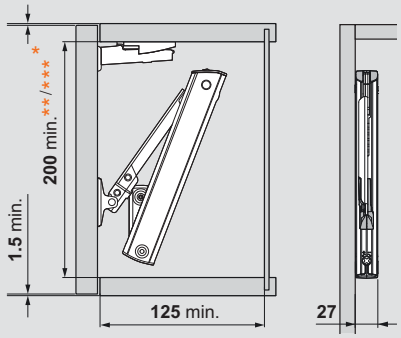

*Minimum top reveal based on hinge used. Please see minimum reveal specs in Concealed hinges brochure

CLIP top Face Frame Application

Lift mechanism

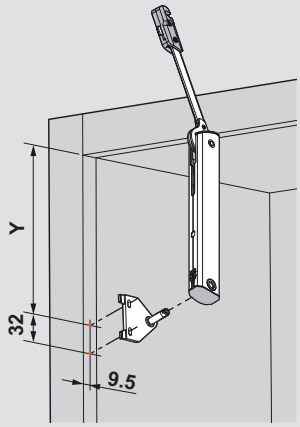

Y = 169 + D + K

Door mounting plate

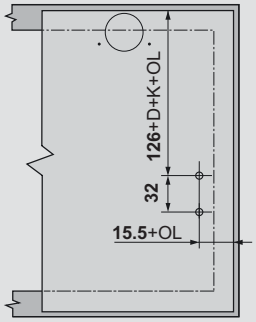

When using large overlay mounting plate **(20K4501)** hole location is offset by **19 (15.5 + OL - 19)**

Attach using #6 x 5/8" (606N/P) wood screw

Cornice and crown molding clearance

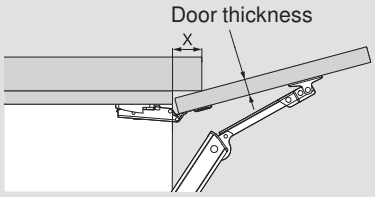

Door thickness	16	19	22	24
X	45	34	23	15

COMPACT Face Frame Application

Lift mechanism

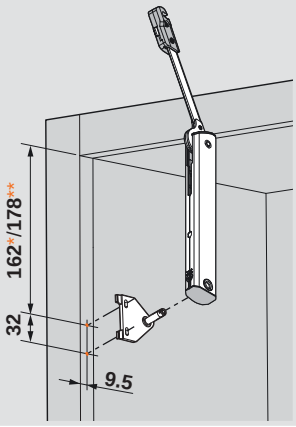

*Location when using COMPACT 39/38C
**Location when using COMPACT 38N

Door mounting plate

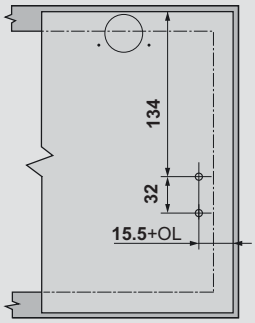

When using large overlay mounting plate **(20K4501)** hole location is offset by **19 (15.5 + OL - 19)**

Attach using #6 x 5/8" (606N/P) wood screw

K = Hinge arm crank		
Straight arm crank	=	**0**
Half-cranked arm	=	**9.5**
Full-cranked arm	=	**18**

Abbreviations		
D	=	Mounting plate height
K	=	Hinge arm crank
OL	=	Overlay

Minimal internal height: **216 for 110° with 20K5501
***Minimal internal height: **225** for COMPACT with 20K5501

NOTE: Designed to be used in a lift up application only

AVENTOS HK-XS Planning Specifications

AVENTOS

blum

Face Frame Applications

CLIP top BLUMOTION 110°

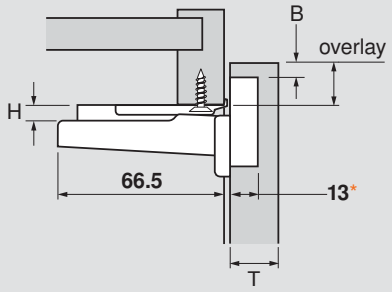

*All **35** and **8** holes must be a minimum of **13** deep

H	Overlay					P	S
0	**14**	**15**	**16**	**17**	**18**	**12**	**21.5**
3	**11**	**12**	**13**	**14**	**15**	**15**	**24.5**
4.5	**9.5**	**10.5**	**11.5**	**12.5**	**13.5**	**16.5**	**26**
6	**8**	**9**	**10**	**11**	**12**	**18**	**27.5**
	3	**4**	**5**	**6**	**7**	fixed distance = **11**	
	B = boring distance						

COMPACT BLUMOTION 39C

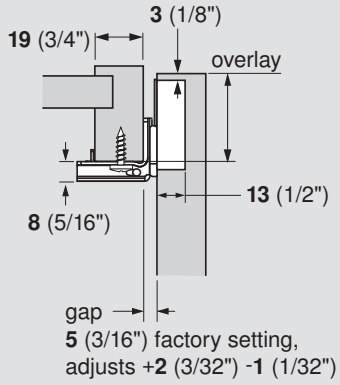

NOTE: For other overlays see Concealed hinges brochure

Overlay
32 (1-1/4")
3 (1/8")
B = boring distance

COMPACT BLUMOTION 38N

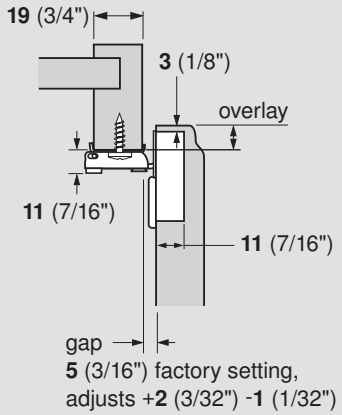

NOTE: For other overlays see Concealed hinges brochure

Overlay
13 (1/2")
3 (1/8")
B = boring distance

Frameless Applications

CLIP top BLUMOTION 110°

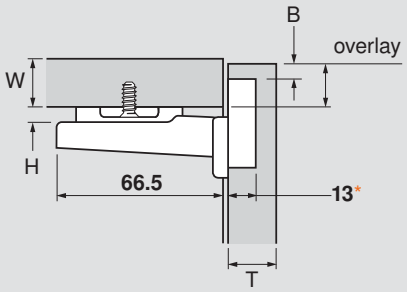

*All **35** and **8** holes must be a minimum of **13** deep

H	Overlay					P	S
0	**14**	**15**	**16**	**17**	**18**	**12**	**21.5**
3	**11**	**12**	**13**	**14**	**15**	**15**	**24.5**
6	**8**	**9**	**10**	**11**	**12**	**18**	**27.5**
9	**5**	**6**	**7**	**8**	**9**	**21**	**30.5**
	3	**4**	**5**	**6**	**7**	fixed distance = **11**	
	B = boring distance						

Minimum Reveal Table

CLIP top BLUMOTION 110°					
3	**0.5**	**1.0**	**1.8**	**2.7**	**4.3**
4	**0.5**	**1.0**	**1.7**	**2.5**	**3.8**
5	**0.5**	**0.9**	**1.7**	**2.4**	**3.4**
6	**0.5**	**0.9**	**1.6**	**2.3**	**3.2**
7	**0.5**	**0.9**	**1.6**	**2.2**	**3.0**
B = boring distance	**16**	**19**	**22**	**24**	**26**
	T = door thickness				

For thickness greater than **26** trial app. recommended

COMPACT BLUMOTION 39C	
3 (1/8")	**5.5** (7/32")
	19 (3/4")
B = boring distance	T = door thickness

COMPACT BLUMOTION 38N	
3 (1/8")	**7** (9/32")
	19 (3/4")
B = boring distance	T = door thickness

Abbreviations		
H	=	Plate height
P	=	Door protrusion
S	=	Side arm protrusion
W	=	Side panel width
T	=	Door thickness

Door protrusion

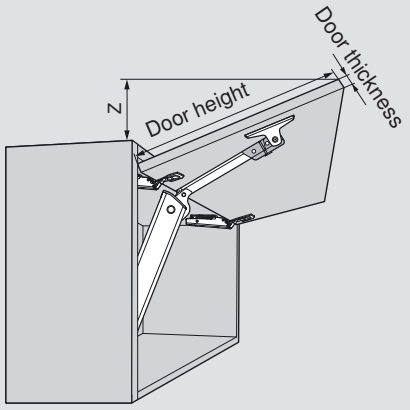

Z = (Door height - A) x 0.3

Door thickness	**16**	**19**	**22**	**24**
A	**45**	**34**	**23**	**15**

NOTE: Use 3 hinges starting at cabinet width **914** (36") and/or power factor 156 and 4 hinges starting at cabinet width **1219** (48") and/or power factor 234

Follow the assembly instructions on page 70

AVENTOS HK-XS Ordering Information for Narrow Aluminum

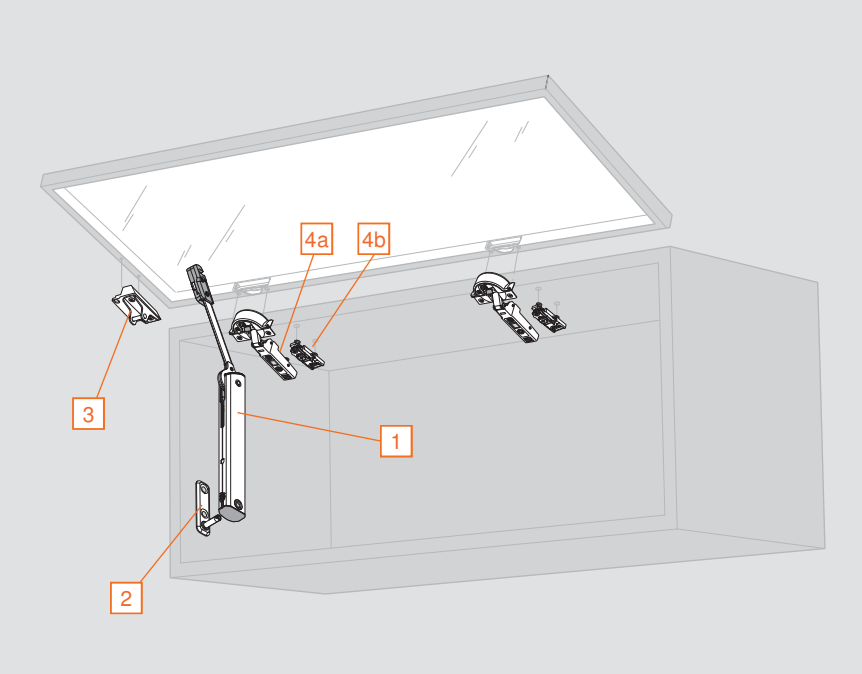

- Well suited for small wall cabinets
- Cabinet height from **238** (9-3/8") to **610** (24")
- Cabinet widths up to **1828** (72")*
- Interior depth minimum of **127** (5")
- Closes silently and effortlessly with CLIP top BLUMOTION
- Symmetrical lift mechanism – can be used on one or both sides
- Designed for use with BLUMOTION hinges
- Optional: TIP-ON for AVENTOS

*Dependent on power factor

Step 1 – Determine the Power Factor for the Application

Power factor = cabinet height (inch) x door weight* (lb)

Determine power factor

To select the correct lift mechanism for a given application, the power factor must first be calculated by using the formula below.
Use the table at the bottom of the page to convert ounces into decimal form for easy calculation.

Power factor = cabinet height multiplied by door weight*

Example:
Cabinet height: 15" (within possible range)
Door weight including twice the handle weight = 9 lb 14 oz (14 oz = .9 lb see chart below)

Power factor = 15 x 9.9
Power factor = 148.5

A power factor of 148.5 requires lift mechanism 20K1501

*Including twice the handle weight

NOTE: AVENTOS planning tools available at blum.com/configurator

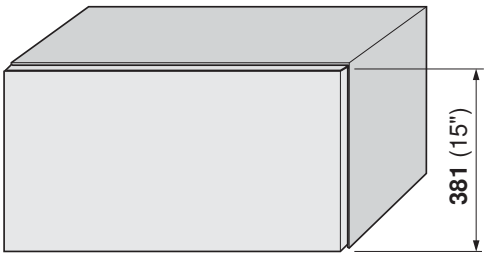

Door weight + twice handle weight = **9** lb 14 oz

Weight conversion chart															
oz	1	2	3	4	5	6	7	8	9	10	11	12	13	14	15
lb	.1	.1	.2	.3	.3	.4	.4	.5	.6	.6	.7	.8	.8	.9	.9

Step 2 – Select the Required Components

Lift mechanism

1

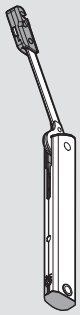

Power factor range (1 lift)	Power factor range (2 lifts)	Part no.
17 – 60	34 – 120	**20K1101**
61 – 112	121 – 224	**20K1301**
113 – 156	225 – 312	**20K1501**

Cabinet mounting plate

2

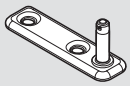

	Part no.
Screw-on	**20K5101**
EXPANDO (Ø**5** dowel)	**20K51E1**

Door mounting plate

3

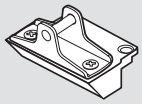

	Part no.
Screw-on	**20K4101A**

Hinge recommendations

4a

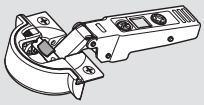

4b

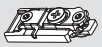

CLIP top BLUMOTION 95°	Part no.
Press-in	**71B950A**
Hinge mounting plate	Part no.
EXPANDO (Ø**5** dowel)	**177H3100E**

NOTE: For other mounting plate options please refer to the Concealed hinges brochure

AVENTOS HK-XS Planning Specifications for Narrow Aluminum

Cabinet and Door Mounting Plate Locations for Frameless Applications

Lift mechanism

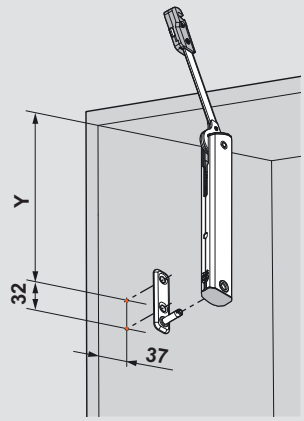

Y = 137 + D + K

Door mounting plate

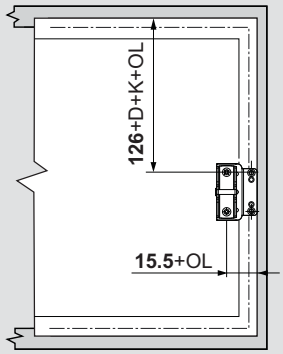

Attach using #6 x **11** (699.110) aluminum screw

Arm assembly mounting plate

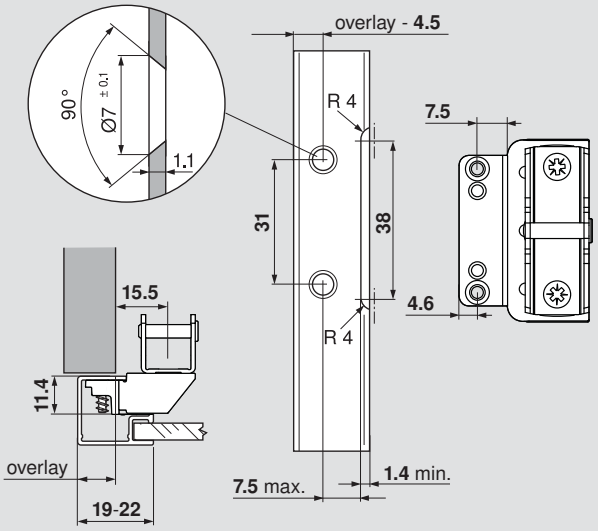

Cornice and crown molding clearance

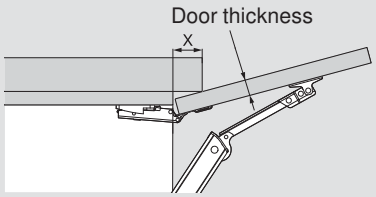

Door thickness	16	19	22	24
X	45	34	23	15

K = Hinge arm crank		
Straight arm crank	=	**0**
Half-cranked arm	=	**9.5**
Full-cranked arm	=	**18**

Abbreviations		
D	=	Mounting plate height
K	=	Hinge arm crank
OL	=	Overlay

Space requirements

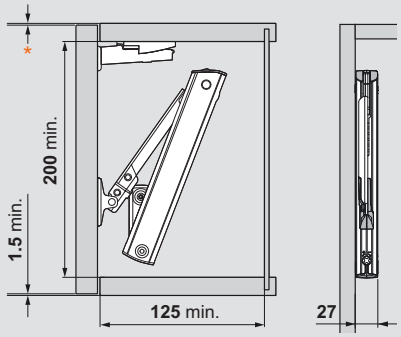

*Minimum top reveal based on hinge used. Please see minimum reveal specs in Concealed hinges brochure

NOTE: Designed to be used in a lift up application only

Frameless Applications

CLIP top BLUMOTION 95°

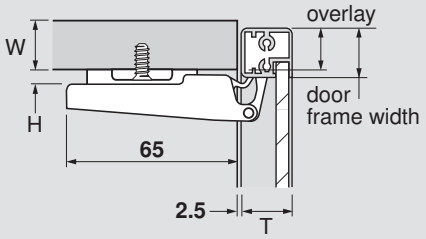

H	Overlay	P	S
0	16	13.5	22
3	13	16.5	25
6	10	19.5	28
9	7	22.5	31
	B = fixed		

NOTE: Use 3 hinges starting at cabinet width **914** (36") and/or power factor 156 and 4 hinges starting at cabinet width **1219** (48") and/or power factor 234

Abbreviations		
H	=	Plate height
P	=	Door protrusion
S	=	Side arm protrusion
W	=	Side panel width
T	=	Door thickness

Door protrusion

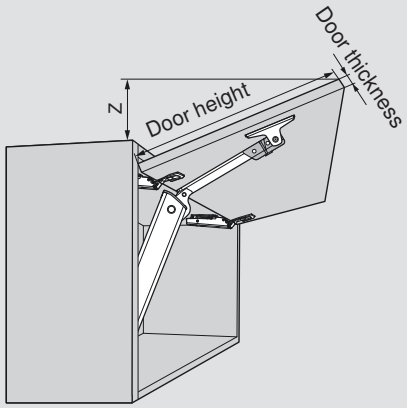

Z = (Door height minus A) x 0.3				
Door thickness	16	19	22	24
A	45	34	23	15

Minimum Reveal Table

CLIP top BLUMOTION 95°					
18	0.2	0.3	0.4	0.6	0.7
19	0.2	0.3	0.4	0.6	0.7
20	0.2	0.3	0.4	0.5	0.7
21	0.2	0.3	0.4	0.5	0.7
22	0.2	0.3	0.4	0.5	0.7
door frame width	18	19	20	21	22
	T = door thickness				

Thickness greater than **22** trial recommended

Installation

Attach cup adapter to the hinge and insert into machined openings

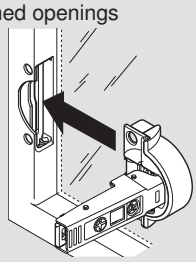

Attach using aluminum screws provided with hinges (699.110)

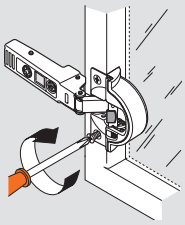

Aluminum door preparation

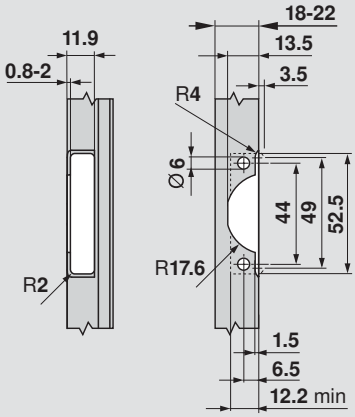

Follow the assembly instructions on page 70

AVENTOS HK-XS Ordering Information for TIP-ON

Lift mechanism

Power factor range (1 lift)	Power factor range (2 lifts)	Part no.
17 – 60	34 – 120	20K1101T
61 – 112	121 – 224	20K1301T
113 – 156	225 – 312	20K1501T

Cabinet mounting plate

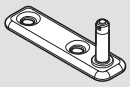

	Part no.
Screw-on	20K5101
EXPANDO	20K51E1

Wood and wide aluminum door hardware

	Part no.
Door mounting plate	20K4101

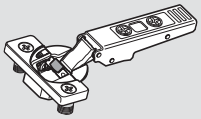

CLIP top 110°, free swing	Part no.
Press-in	70T3580.TL
Hinge mounting plate	Part no.
EXPANDO	177H3100E

NOTE: Refer to pages 62-63 for installation specifications

Narrow aluminum door hardware

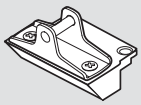

	Part no.
Door mounting plate	20K4101A

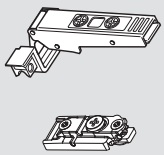

CLIP top 120°, free swing	Part no.
Press-in	72T550A.TL
Hinge mounting plate	Part no.
EXPANDO	177H3100E

NOTE: Refer to pages 66-67 for installation specifications

TIP-ON set for standard doors

White
Gray
Black

Use of Screw-on catch plate required for all applications

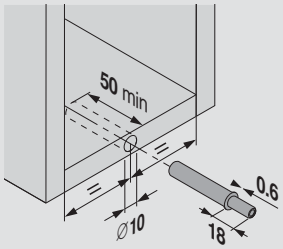

- Nylon gray unit with magnet tip
- Adjustment range +**4** mm to -**1** mm
- For door heights up to **400** (15-3/4")
- Works for overlay and inset applications
- Can be bored into the panel or used with an adapter plate

Set includes:

- TIP-ON unit
- Self-adhesive catch plate
- Screw-on catch plate
- Wood screw

NOTE: Due to various door weights and sizes, trial application recommended

	Part no.
Standard door set	**956.1004**

TIP-ON set for large doors

White
Gray
Black

Use of Screw-on catch plate required for all applications

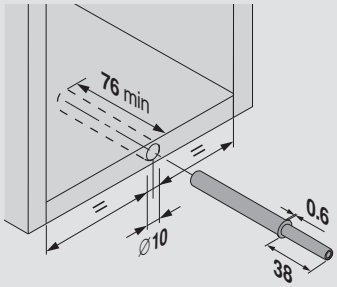

- Nylon gray unit with magnet tip
- Adjustment range +**4** mm to -**1** mm
- For door heights up to **400** (15-3/4")
- Works for overlay and inset applications
- Can be bored into the panel or used with an adapter plate

Set includes:

- TIP-ON unit
- Self-adhesive catch plate
- Screw-on catch plate
- Wood screw

NOTE: Due to various door weights and sizes, trial application recommended

	Part no.
Large door set	**956A1004**

TIP-ON for AVENTOS specifications

Standard doors

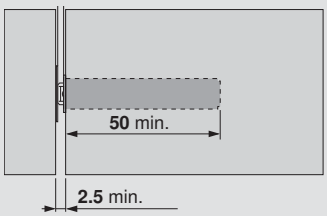

Large doors

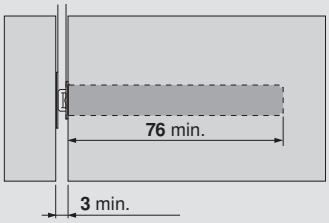

Screw-on catch plate specifications

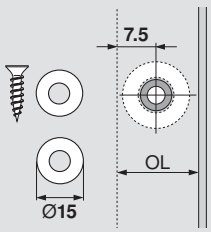

Pre-boring Ø**2.5** countersunk pilot holes are required

NOTE: For TIP-ON application, free swing hinge door drilling pattern is different. Please refer to the Concealed Hinge brochure

For adapter plate mounting please refer to the Concealed hinges brochure

AVENTOS HK-XS Assembly

Attaching AVENTOS HK-XS cabinet and door mounting plate

1 Attach cabinet mounting plate

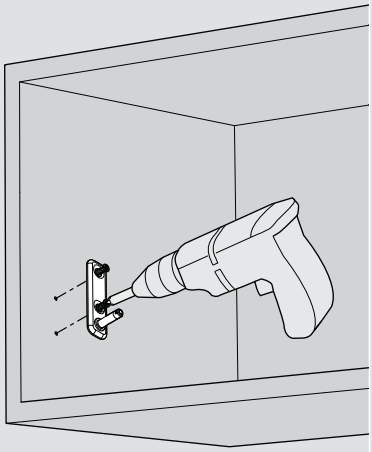

2 Attach door mounting plate. Insert hinge.

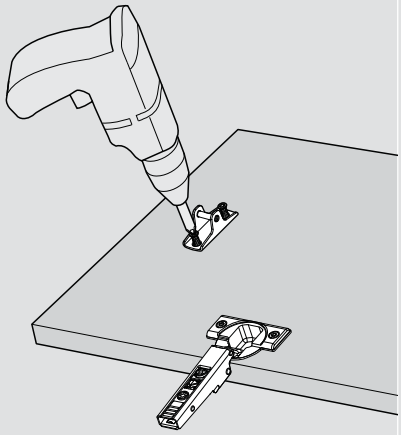

3 Attach door to the cabinet

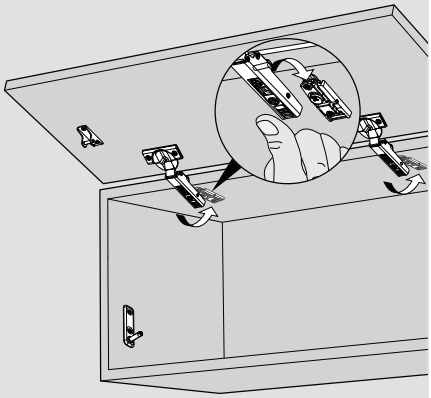

Attaching AVENTOS HK-XS lift mechanism to cabinet

4 Attach the lift mechanism to cabinet mounting plate

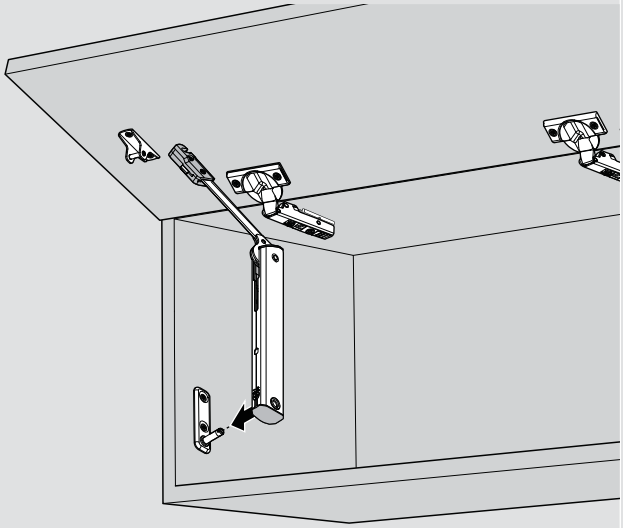

5 Attach lift mechanism to door mountin plate

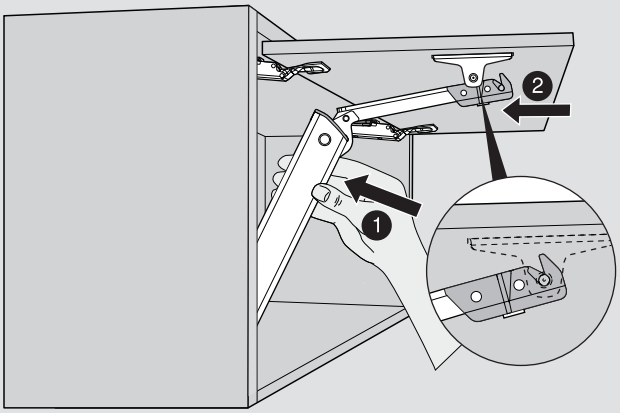

Warning: Risk of injury by spring-loaded lever arm!

- Do not push telescopic arm down
- Remove telescopic arm from mechanism before installing cabinet

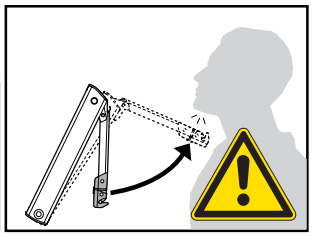

Adjusting the lift mechanism

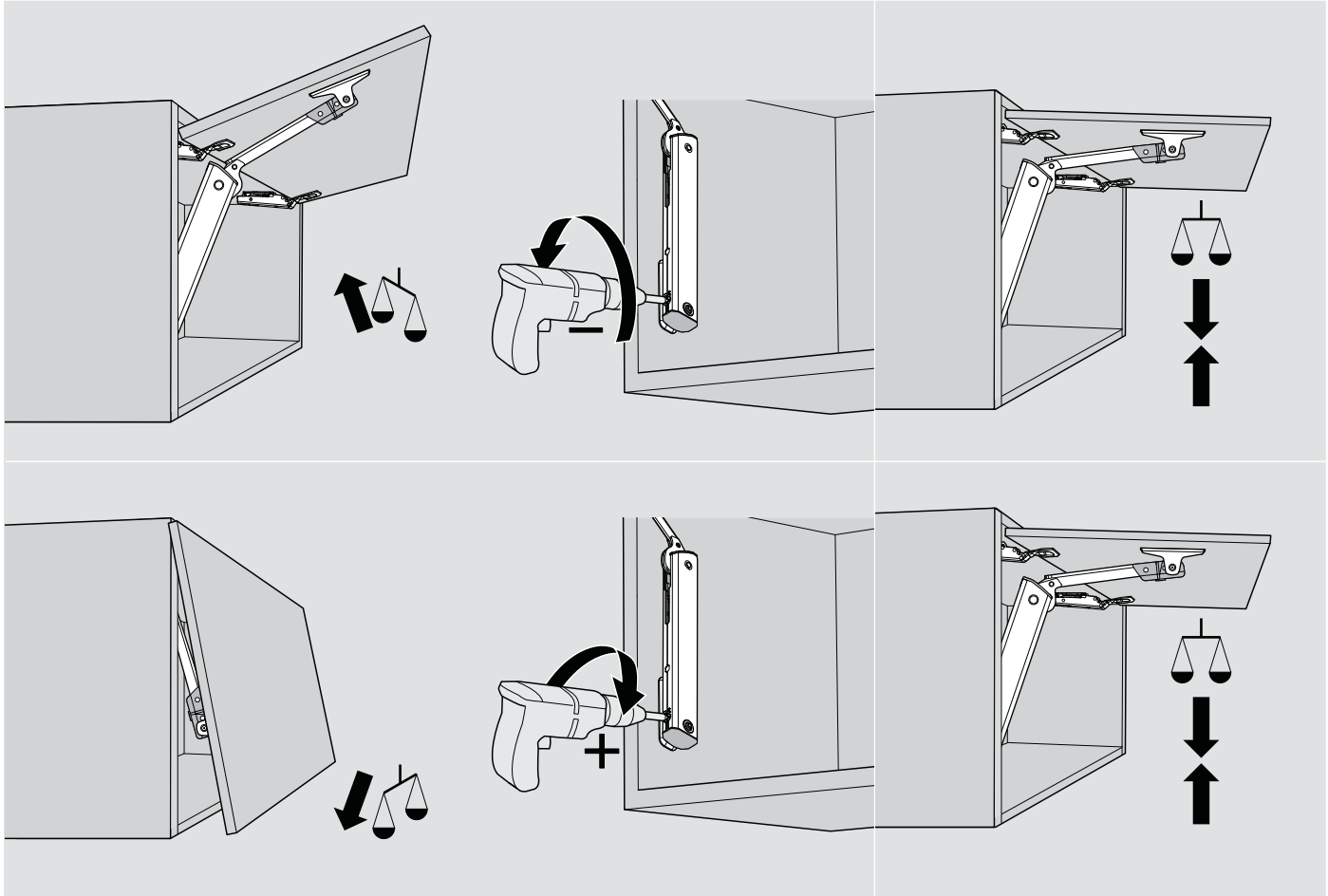

AVENTOS HK-XS door adjustment

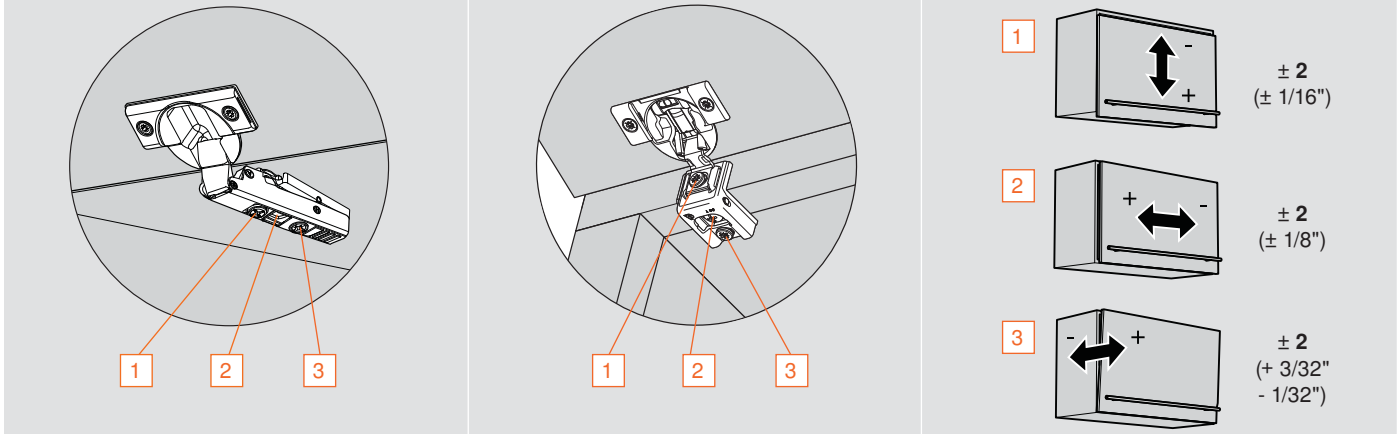

NOTE: CLIP top (COMPACT) adjustment

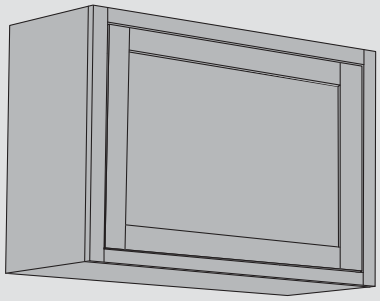

Face frame inset application

When it comes to inset cabinets and AVENTOS, there are many ways to accomplish this application. Below is an option that can be used for both face frame and frameless cabinets alike.

Face Frame Application

The illustrations below show the idea of blocking-out the interior of a face frame cabinet to obtain the needed space required for AVENTOS. By blocking-out the interior of the cabinet to protrude into the cabinet opening, we have moved the AVENTOS lift mechanism far enough into the opening for the arm assembly to clear the frame of the cabinet.

Planning information for blocking-out

In this illustration the 37 setback for the Ø5 x 5 locating pin holes is measured from the back of the door (or back edge of face frame). The Y dimension is the locating pin position of the selected lift mechanism.

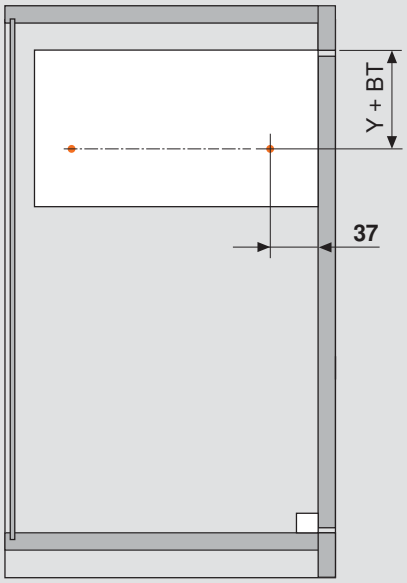

NOTE: Mounting plate position varies based on block-out thickness used at top of cabinet

This illustration shows how the block-out provides the needed clearance for the lift mechanism and also provides a stopping point for the door.

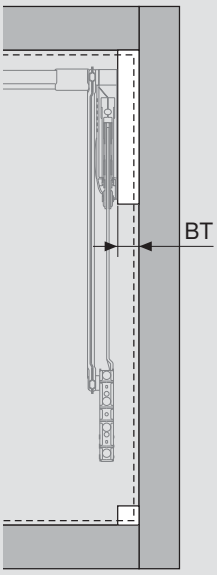

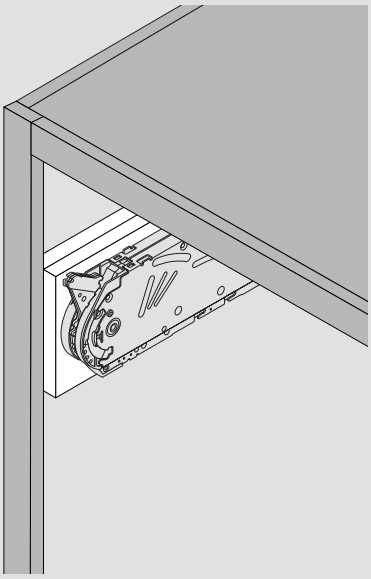

BT = block-out thickness

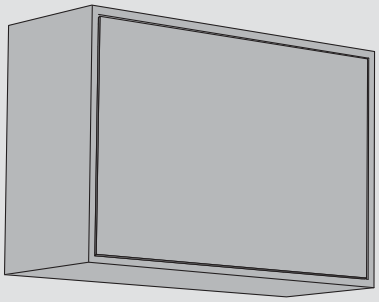

Frameless inset application

When it comes to inset cabinets and AVENTOS, there are many ways to accomplish this application. Below is an option that can be used for both face frame and frameless cabinets alike.

Face Frame Application

The illustrations below show the idea of building a cabinet within a cabinet to obtain the needed space required for AVENTOS. By either building a smaller cabinet within or adding panels to the outside of a cabinet, you have made it possible to simulate the look of an inset cabinet.

Planning information for cabinet-within-cabinet

In this illustration the 37 setback for the Ø5 x 5 locating pin holes is measured from the back of the door (or front edge of the interior cabinet). The Y dimension is determined by the selected AVENTOS lift system.

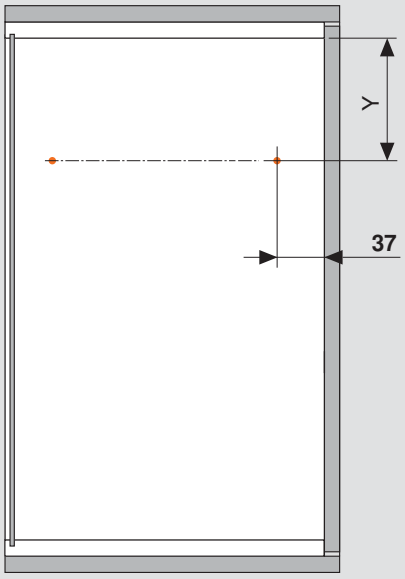

NOTE: Mounting plate position varies based on block-out thickness used at top of cabinet

This illustration shows how the interior cabinet is simply an overlay cabinet that is set back the thickness of the door front and bumper. This also provides a stopping point for the door.

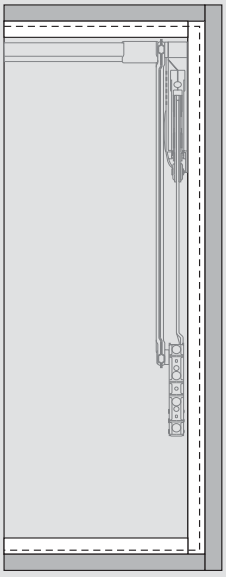

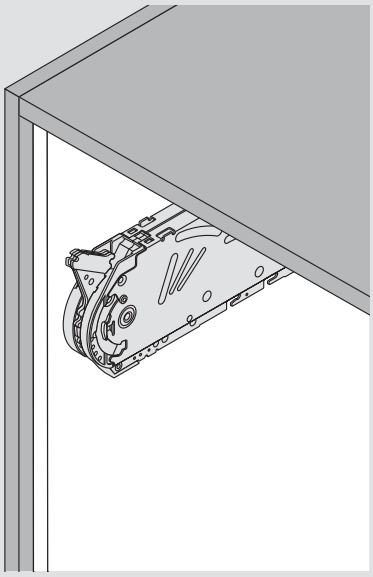

NOTE: The top and bottom panels of the inner cabinet are optional, but their intended thicknesses are needed for calculating the Y dimension for the lift mechanism

AVENTOS HF angle restriction clips

- Restricts opening angle of the door
- Prevents the door from hitting an object above or keeps the handle within reach on very high cabinets
- One required per lift mechanism
- Must be installed prior to the reference run in SERVO-DRIVE applications

	Part no.
104° restriction clip	**20F7051**
83° restriction clip	**20F7011**

Attachment

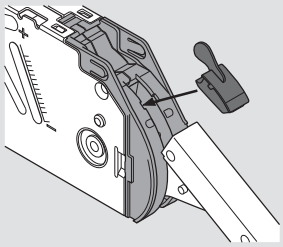

Clearance above the cabinet

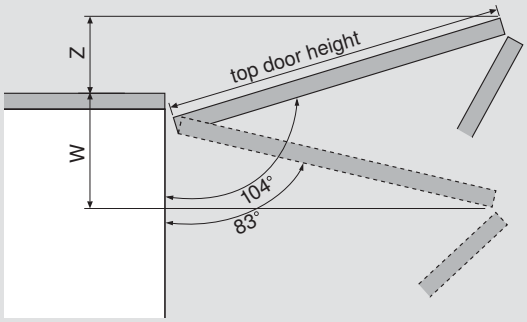

Using 104° clip	Z = top door height x .24 + **19**
Using 83° clip	W = top door height x .12 - **25**

AVENTOS HK-S angle restriction clips

- Restricts opening angle of the door
- Prevents the door from hitting an object above or keeps the handle within reach on very high cabinets
- One required per lift mechanism
- Must be installed prior to the reference run in SERVO-DRIVE applications

	Part no.
100° restriction clip	**20K7A41**
75° restriction clip	**20K7A11**

HK-S attachment

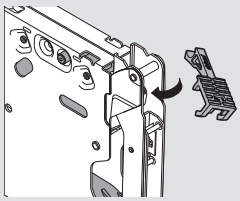

Clearance above the cabinet

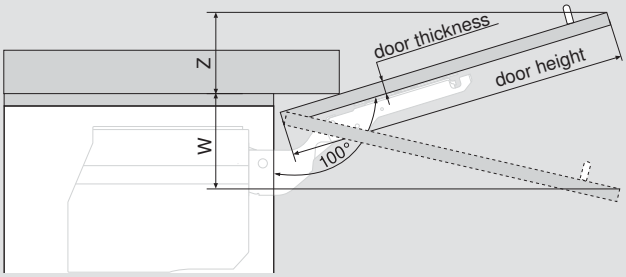

Using 100° clip	Z = door height x .17 minus **15** + door thickness
Using 75° clip	W = door height x .26 + **15**

Face Frame Mounting Brackets

AVENTOS

AVENTOS face frame mounting brackets provide a fast and easy way to install AVENTOS in face frame cabinets without the need to block out. The brackets provide an accurate mounting location in the cabinet for the lift mechanism to simply mount to the bracket with the supplied mounting screws.

AVENTOS HF face frame mounting bracket set

- Brackets for mounting AVENTOS HF in face frame cabinet
- Minimum recess of **12.5** (1/2")
- Provides accurate mounting position for lift mechanism

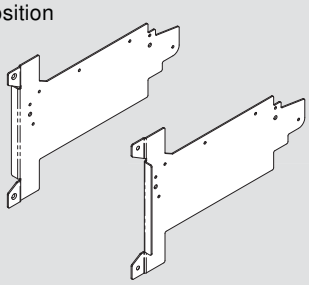

Set includes:

- Right and left brackets
- M4 X **30** lift mounting screws (qty 12)

	Part no.
HF frame mounting bracket set	**20F6001**

AVENTOS HL face frame mounting bracket set

- Brackets for mounting AVENTOS HL in face frame cabinet
- Minimum recess of **15.5** (9/16")
- Provides accurate mounting position for lift mechanism

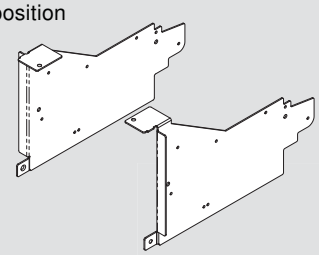

Set includes:

- Right and left brackets
- M4 X **30** lift mounting screws (qty 12)

	Part no.
HL frame mounting bracket set	**20L6001**

AVENTOS HK-S face frame mounting bracket set

- Brackets for mounting AVENTOS HK in face frame cabinet
- Minimum recess of **12.5** (1/2")
- Provides accurate mounting position for lift mechanism

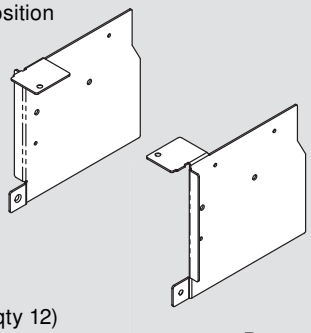

Set includes:

- Right and left brackets
- M4 X **30** lift mounting screws (qty 12)

	Part no.
HK-S frame mounting bracket set	**20K6A01**

AVENTOS HF face frame bracket mounting locations

The locating pin position (**Y**) still needs to be calculated to determine proper bracket mounting location. Please see page 12.

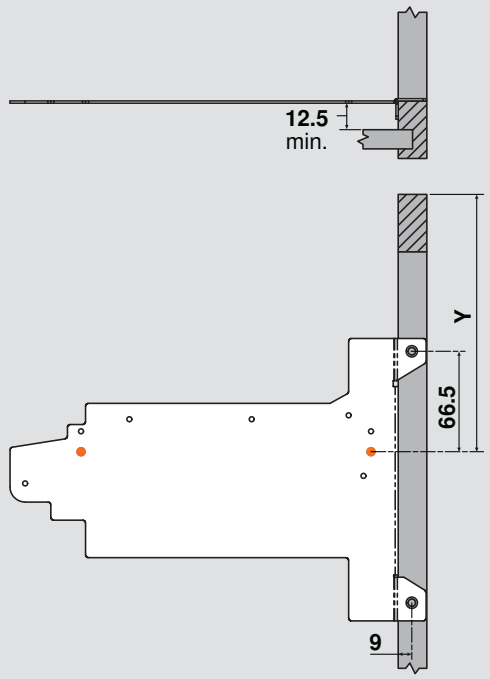

NOTE: Locating pin location marked in orange

Attach bracket to face frame with two #7 x 3/4" (7074N) wood screws. Attach lift mechanism to bracket with six M4 x **30** machine screws (included).

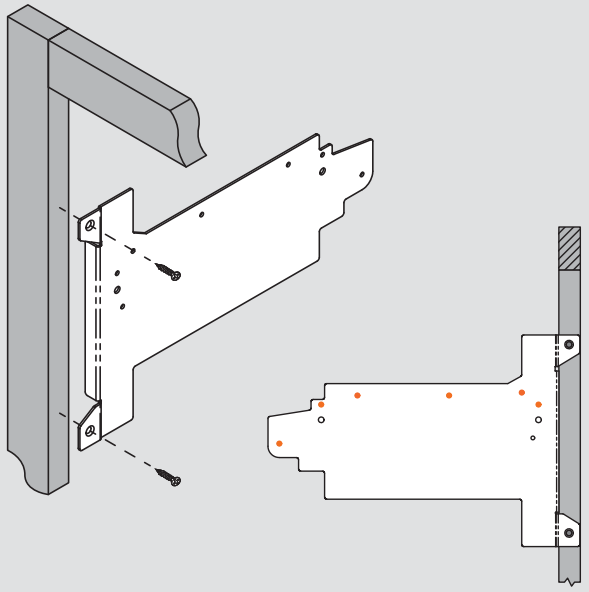

NOTE: Machine screw mounting locations marked in orange

AVENTOS HL face frame bracket mounting locations

Due to mounting bracket position, the door mounting plate will need to be moved **2** lower on the door to maintain proper mounting position.

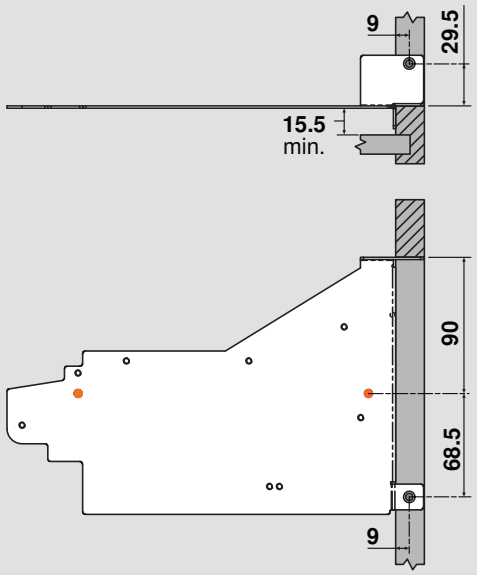

NOTE: Locating pin location marked in orange

Attach bracket to face frame with two #7 x 3/4" (7074N) wood screws. Attach lift mechanism to bracket with six M4 x **30** machine screws (included).

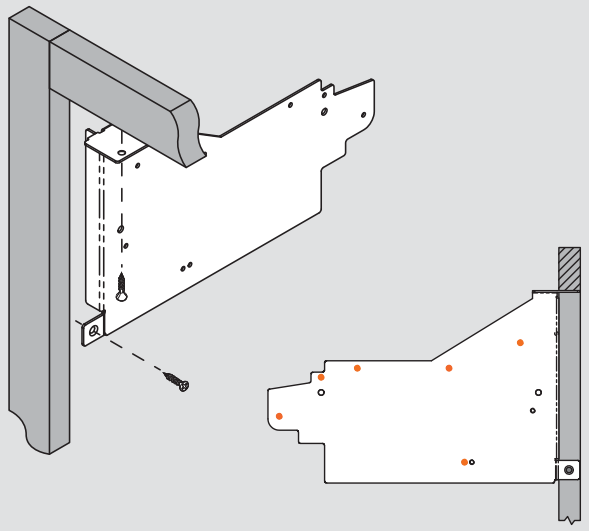

NOTE: Machine screw mounting locations marked in orange

AVENTOS HK-S face frame bracket mounting locations

Due to mounting bracket position, the door mounting plate will need to be moved **1.5** lower on the door to maintain proper mounting position. Locating pin position is set at **35** setback allowing for up to **20** top overlay.

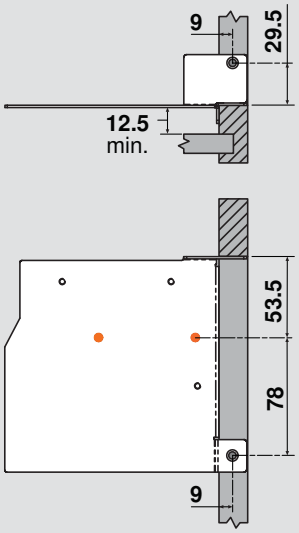

NOTE: Locating pin location marked in orange

Attach bracket to face frame with two #7 x 3/4" (7074N) wood screws. Attach lift mechanism to bracket with three M4 x **30** machine screws (included).

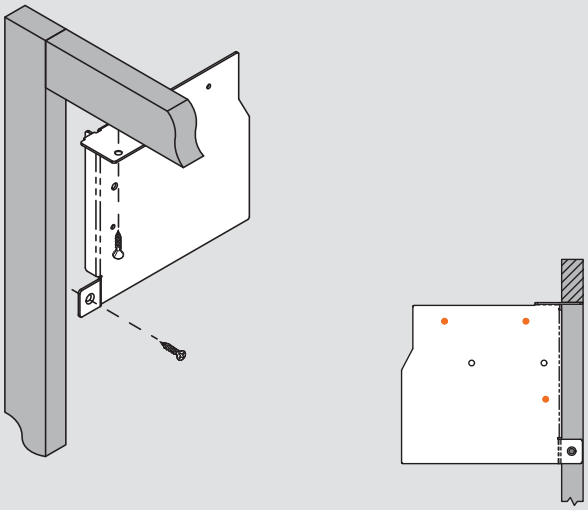

NOTE: Machine screw mounting locations marked in orange

Stabilizer Rod Connector Sets

Components

AVENTOS HL set

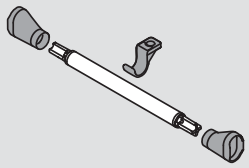

AVENTOS HS set

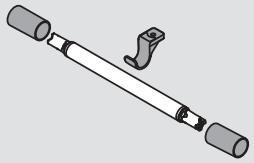

NOTE: Cabinets wider than 46.5” internally require rod connector set.

Set includes:

- Connector rod
- Oval cover cap (qty 2)
- Top mounting hook

Cut rods to:

Inside cabinet width divided by 2 minus **147** (5-13/16") for SERVO-DRIVE minus **165** (6-1/2")

	Part no.
HL rod connector set	20Q153ZA
HS rod connector set	20Q153ZN
Installation screw	606N or 606P

Mounting through a center panel

AVENTOS HL

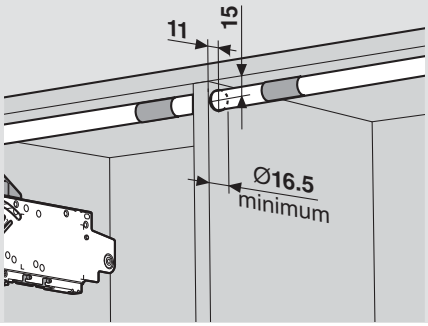

AVENTOS HS

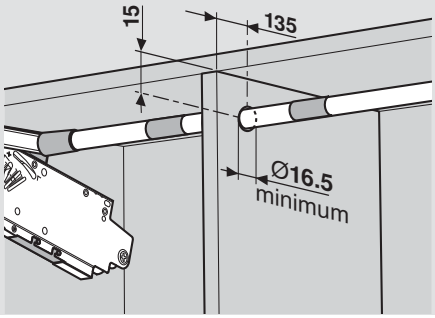

Mounting without a center panel

AVENTOS HL

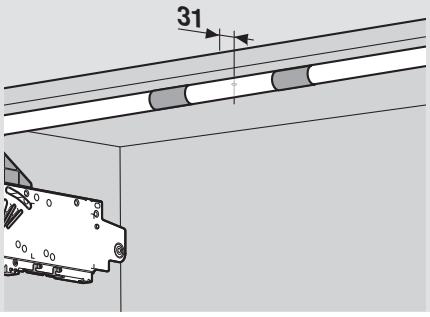

AVENTOS HS

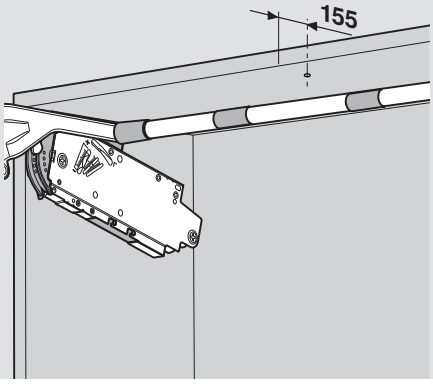

SERVO-DRIVE for AVENTOS

Opens and Closes Automatically

SERVO-DRIVE equipped AVENTOS lift systems open with just a light touch – and then close again with the press of a button. The eletrical opening support for lift systems is an inspiring feature that is certain to impress.

Contents

SERVO-DRIVE for AVENTOS

Effortless Opening and Closing

A light touch on the front using your hand or elbow is all that's required to open doors with SERVO-DRIVE for AVENTOS.

Even large and heavy doors open effortlessly. For the user, this means easy access to the cabinet interior.

Touch to close

Thanks to the easy-to-reach switch on the side of the cabinet, doors close ergonomically no matter the cabinet height.

While the proven soft-close technology, BLUMOTION, ensures doors close quietly and effortlessly.

The Focus is on the User

Safety is key – even when closing

Even when the switch has just been pressed for closing – the closing procedure is halted immediately if the user again reaches into the cabinet and/or an object is placed between the cabinet and the door.

Always in control

Lift systems open and close automatically, although the motion can be interrupted at any time. In addition, lift systems with SERVO-DRIVE for AVENTOS can also be easily opened and closed manually at anytime, like when there is a power outage.

Completely synchronized

Up to three drive units can be set for synchronized motion. Synchronization is ideal for multiple cabinets that share one wide door.

Collision avoidance

For corner applications, it is especially important that lift system fronts do not open simultaneously. Thanks to the collision avoidance function, you can set drive units so that only one front can be opened at a time.

Overview of Components

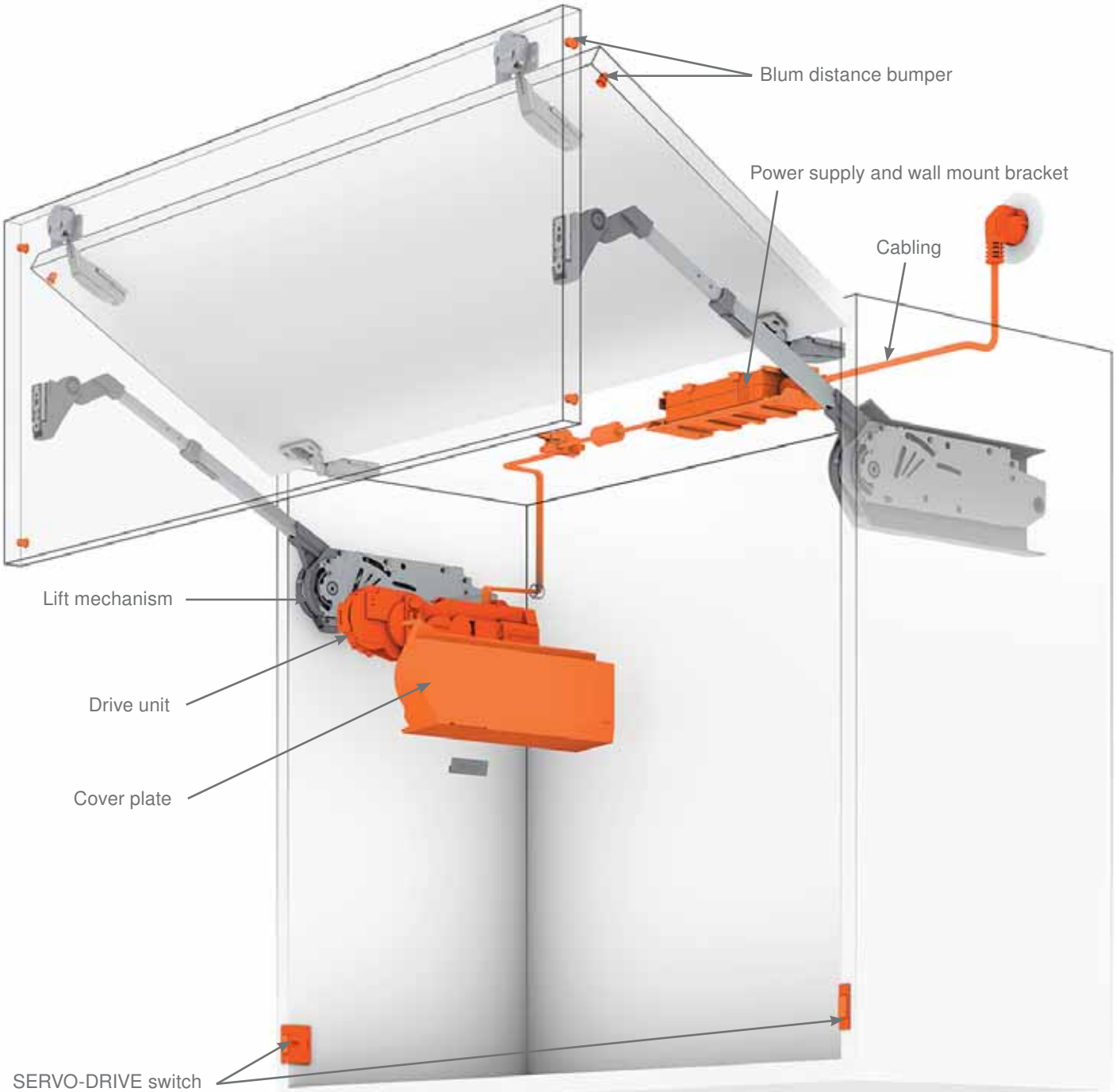

After lift mechanism installation and adjustment, SERVO-DRIVE components are attached to the lift mechanism and cabinet.

Lift mechanism

- SERVO-DRIVE-compatible lift mechanisms with tool-free attachment of the drive unit. Please see AVENTOS, HF, HS, HL sections.

Drive unit

- Attaches to the left lift mechanism
- Tool-free attachment
- Same drive unit used for AVENTOS lift mechainsms HF, HS and HL
- Additional features for synchronization and collision avoidance

Cover plate

- Covers the lift mechanism and drive unit

SERVO-DRIVE switch

- Attaches to both cabinet sides
- Wireless connection to the drive unit
- Frequency 2.4 GHz
- Certified for use worldwide

Blum distance bumper

- Distance bumpers ensure the required trigger path of 2 mm
- Aluminum frame recommendation: consider drilling for the distance bumper in the cabinet side

Cabling

- Proven cabling components such as the SERVO-DRIVE universal cable, cable connectors and cable end protectors
- Easy, practically tool-free cabling

Power supply

- 24W SERVO-DRIVE power supply
- 12W SERVO-DRIVE uno power supply for single applications

Wall mount bracket for power supply

- For secure mounting

SERVO-DRIVE for AVENTOS HF

Ordering Information

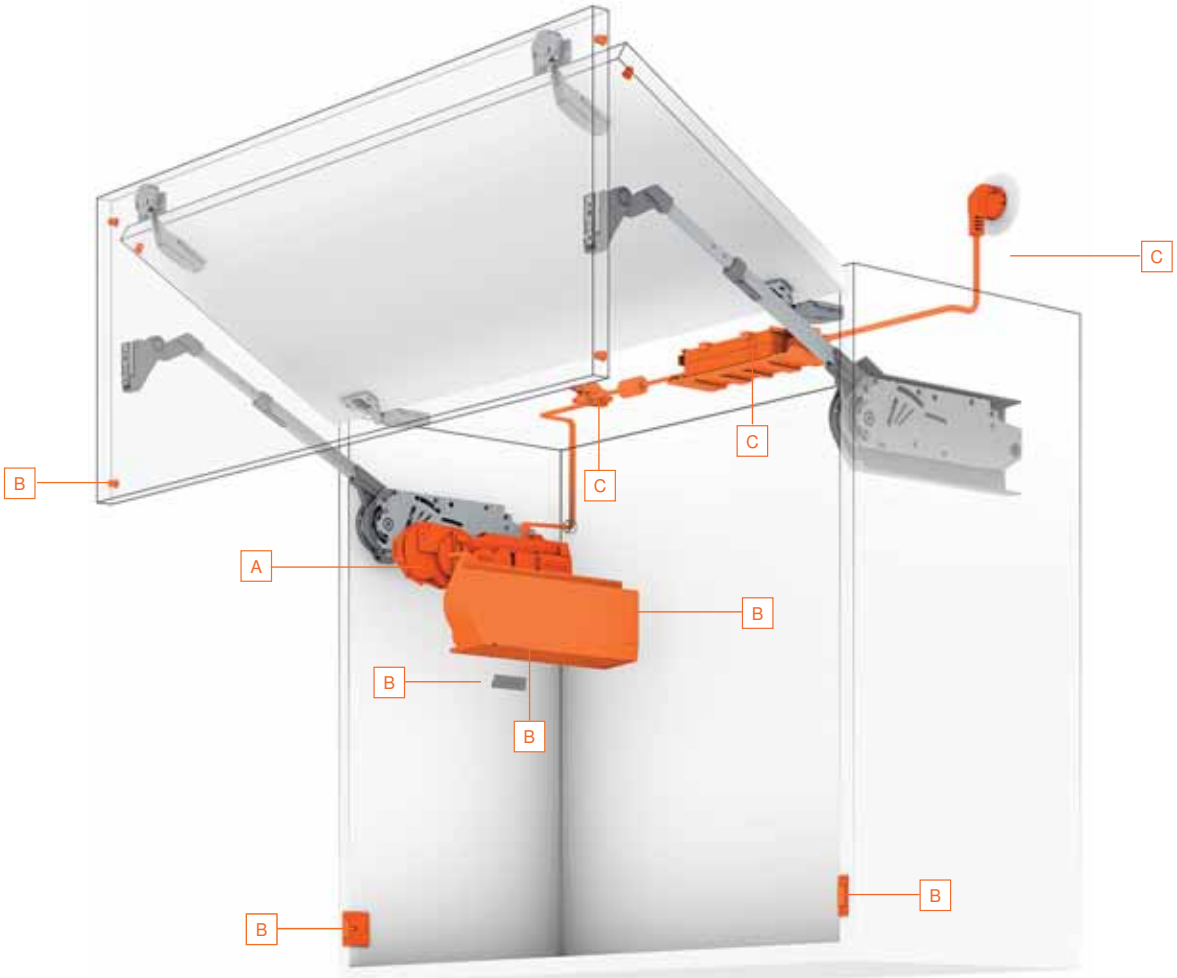

SERVO-DRIVE set

A Set includes:

- Drive unit
- 60" universal cable
- Cable connector
- Cable end protector (qty 2)

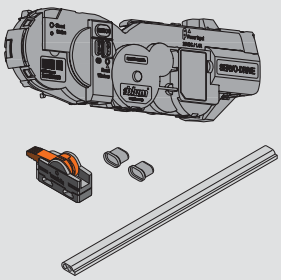

	Part no.
SERVO-DRIVE set	**21FA000**

Cover set

B Set includes:

- SERVO-DRIVE cover plate (left)
- Cover plate (right)
- Non-handed cover cap (qty 2)
- SERVO-DRIVE switches (qty 2)
- Ø5 Blum distance bumper (qty 6)
- Colors: Light Gray, Dark Gray and Silk White

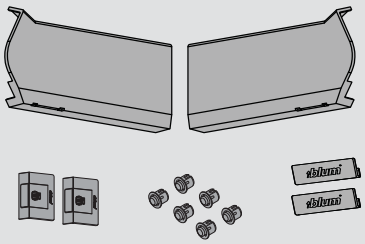

	Part no.
Cover set	**21F8020.NA**

NOTE: For additional AVENTOS HF components and installation instructions, see pages 11-12

C Power supply options - see page 90

SERVO-DRIVE for AVENTOS HS

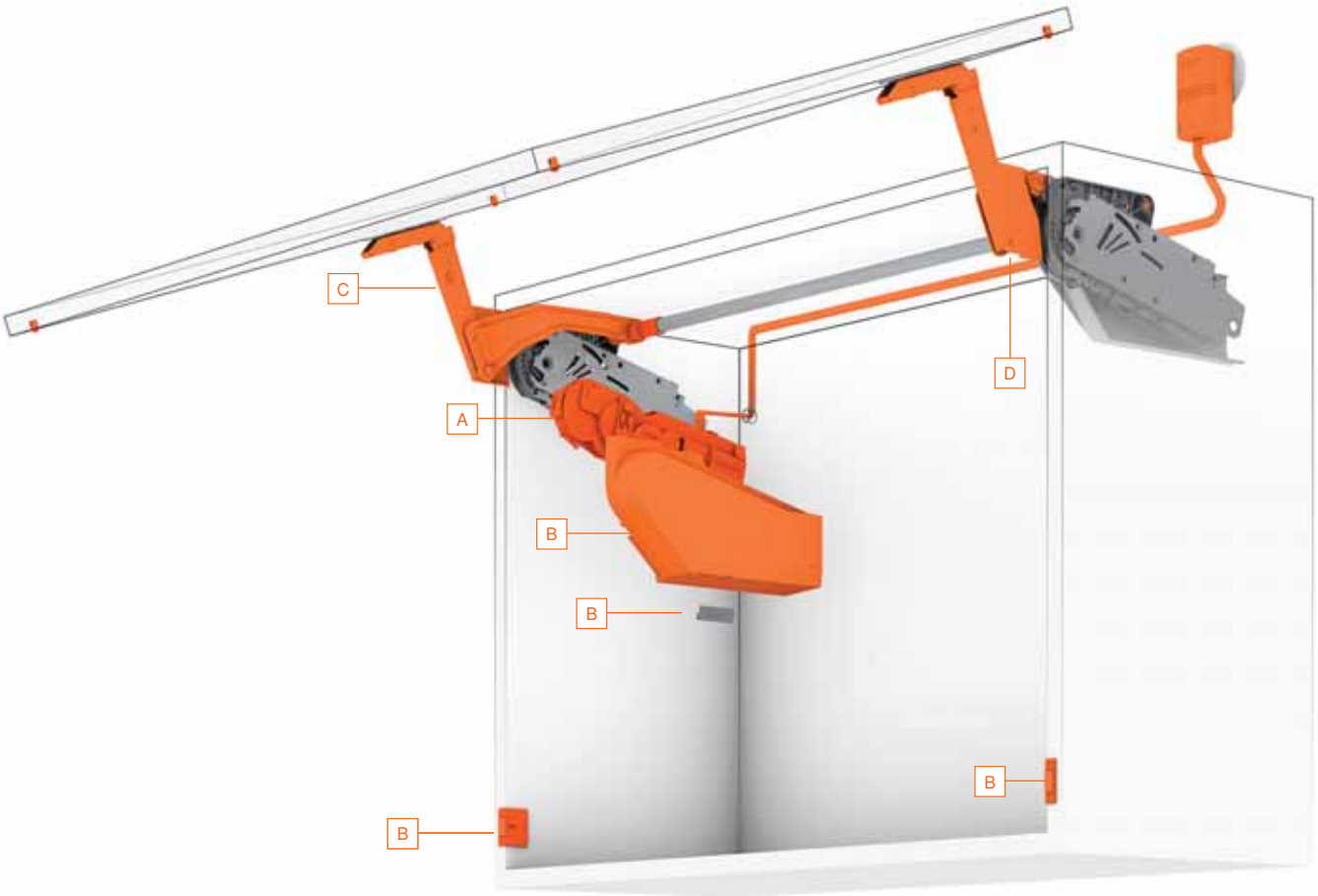

SERVO-DRIVE set

A Set includes:

- Drive unit
- 60" universal cable
- Cable connector
- Cable end protector (qty 2)

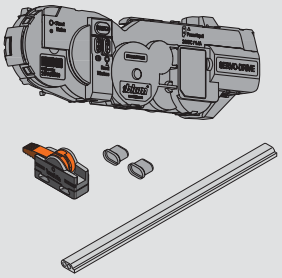

	Part no.
SERVO-DRIVE set	21FA000

Cover set

B Set includes:

- SERVO-DRIVE cover plate (left)
- Cover plate (right)
- Non-handed cover cap (qty 2)
- SERVO-DRIVE switches (qty 2)
- Ø5 Blum distance bumper (qty 6)
- Colors: Light Gray, Dark Gray and Silk White

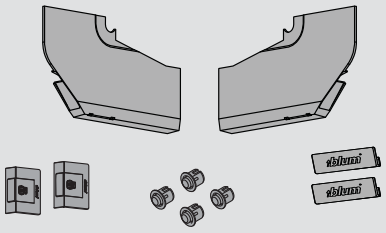

	Part no.
Cover set	21S8020.NA

Arm assembly set

C Set includes:

- SERVO-DRIVE arm assembly (left)
- Standard arm assembly (right)
- Stablilizer rod cover cap (qty 2)

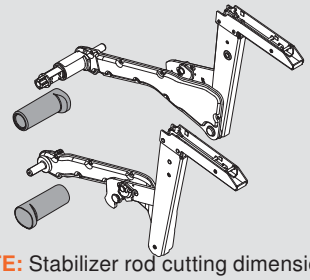

NOTE: Stabilizer rod cutting dimension for SERVO-DRIVE application is length = interior cabinet width minus **164** (6-7/16")

	Part no.
Arm assembly set	21S3500.01

NOTE: For additional AVENTOS HS components and installation instructions, see pages 23-24

D Power supply options - see page 90

SERVO-DRIVE for AVENTOS HL

blum

Ordering Information

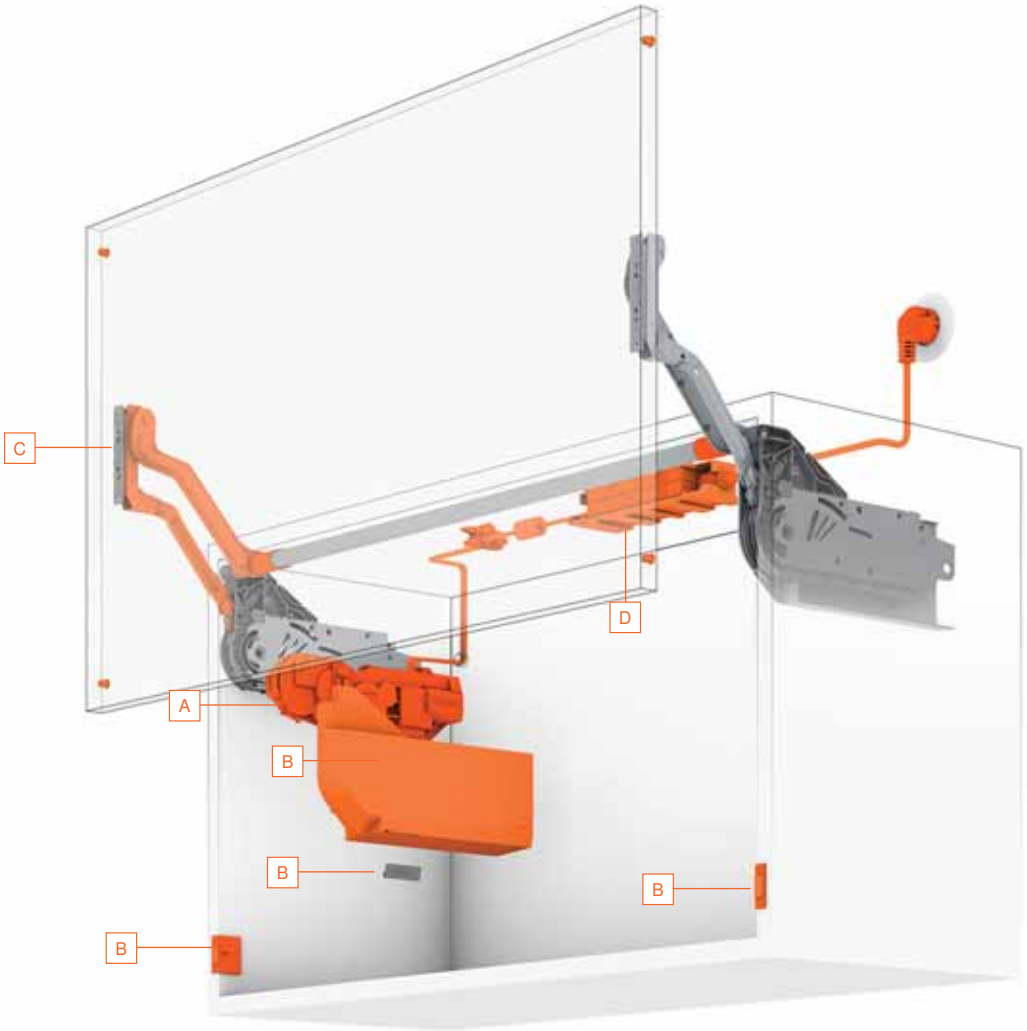

SERVO-DRIVE set

A Set includes:

- Drive unit
- 60" universal cable
- Cable connector
- Cable end protector (qty 2)

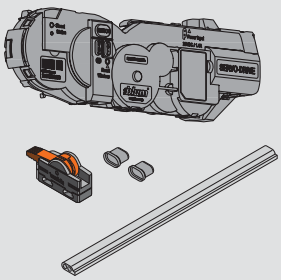

	Part no.
SERVO-DRIVE set	21FA000

Cover set

B Set includes:

- SERVO-DRIVE cover plate (left)
- Cover plate (right)
- Non-handed cover cap (qty 2)
- SERVO-DRIVE switches (qty 2)
- Ø5 Blum distance bumpet (qty 6)
- Colors: Light Gray, Dark Gray and SIlk White

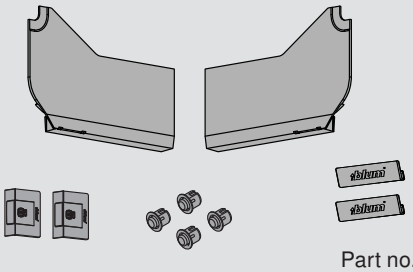

	Part no.
Cover set	21L8020.NA

NOTE: For additional AVENTOS HL components and installation instructions, see pages 35-36

Arm assembly set

C Set includes:

- SERVO-DRIVE arm assembly (left)
- Standard arm assembly (right)
- Stabilizer rod cover cap (qty 2)

NOTE: Stabilizer rod cutting dimension for SERVO-DRIVE application is length = interior cabinet width minus **164** (6-7/16")

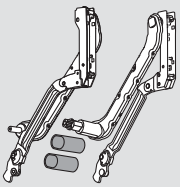

Cabinet height	Part no.
300 to **349**	21L3200.01
350 to **399**	21L3500.01
400 to **550**	21L3800.01
450 to **580**	21L3900.01

D Power supply options - see page 90


blum

SERVO-DRIVE for AVENTOS

blum

Electrical Components

Power supply set

Set includes:

- Power supply
- Wall mount bracket
- Three-prong power cord
- Cable connector
- Cable end protector (qty 3)
- Cable clips (qty 10)
- 19 feet universal cable

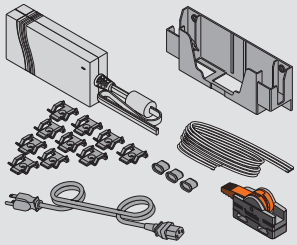

	Part no.
Power supply set	Z10NE03UG10

SERVO-DRIVE power supply components

Supplies power for up to 16 drive units

- Energy Star Level VI
- UL certified
- Connect to switched GFCI outlet
- Cable length is six feet

NOTE: Three-prong power cord required

	Part no.
Power supply	Z10NE030G
Three-prong power cord	Z10M200U

SERVO-DRIVE uno power supply

Supplies power to a single drive unit

- 44" power cord
- Extendable up to 6 feet using cable connectors (sold seperately)

	Part no.
Power supply set	Z10NA30UGF

SERVO-DRIVE switch

For adding additional activation switches to a SERVO-DRIVE for AVENTOS application.

- Up to six switches can be added per drive unit
- Colors: Light Gray, Dark Gray and Silk White

NOTE: A switch can only be synchronized to one drive unit

	Part no.
SERVO-DRIVE switch	23P5020

Space requirements and safety distance for power supply

A safety distance of 30 mm must be maintained for air circulation

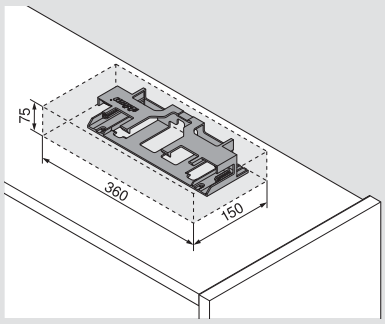

Output specifications

Output voltage	24 VDC
Output power	24 W continuous / 12 W continuous*
Minimum load	None
Over voltage protection	At 33 VDC
Overload protection	10.5 A hiccup trip and restart mode with auto recovery
Short circuit protection	Continuous

*12 W Output power applies to SERVO-DRIVE uno only

Environmental information

Operating temperature	32° F–104° F
Storage temperature	-4° F to 185° F
Protection	IP40

Input specifications

Input voltage	100-240 VAC
Input frequency	50-60 Hz
Input current	0.6 A
Inrush current	100 A maximum at 240 VAC
Protection class	Class I
Earth leakage current	3.5 mA maximum

General specifications

Efficiency	≥ 87%
Switching frequency	65 kHz typical
No load loss (standby)	< 0.075 W
Energy Star	Level VI

Safety / Approvals

EN / IEC	60950, 60335-1
UL	60950-1

Wiring options

For wall cabinets

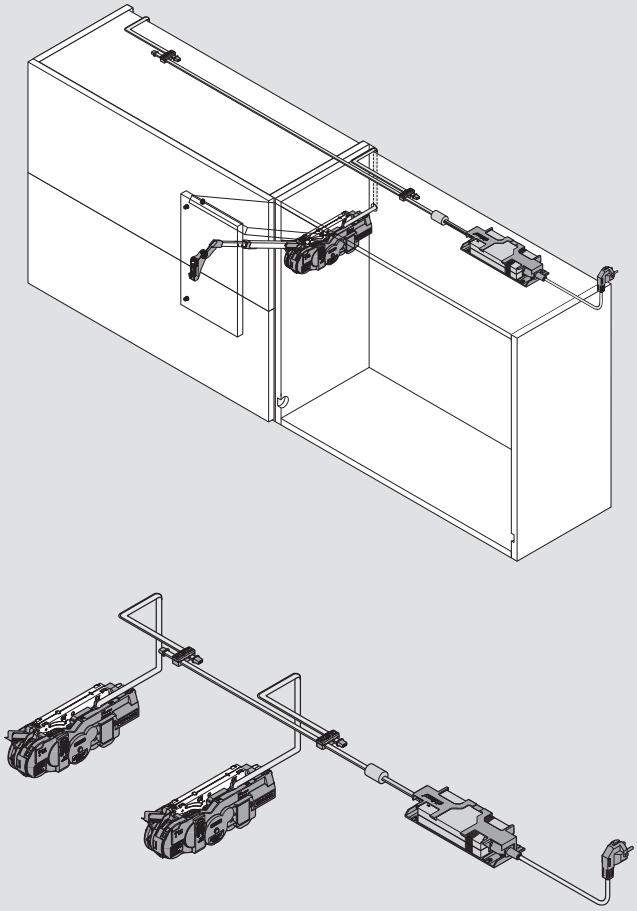

For SERVO-DRIVE in wall and base cabinets

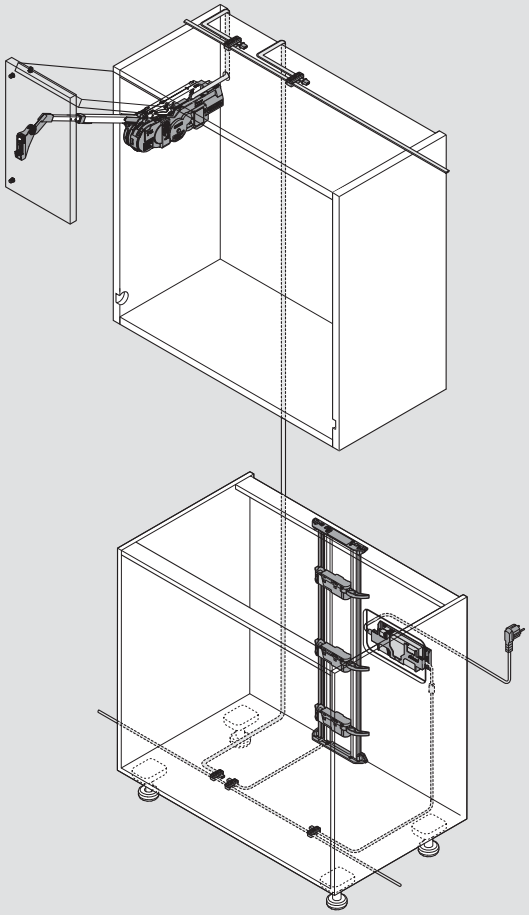

Installing cable connector

1 Insert cable for distribution into open slot
2 Insert cable for power into open slot

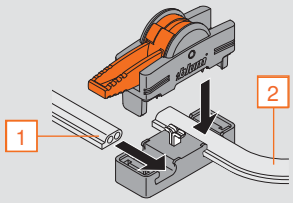

3 Rotate orange lever to lock into place
4 Slide cable end protector over exposed cable

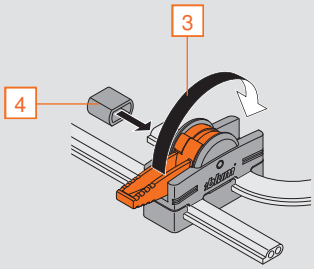

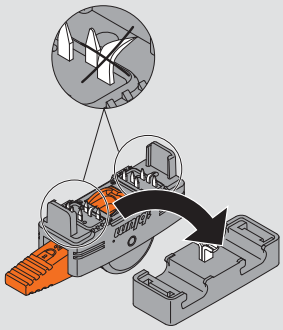

NOTE: Ensure piercing pins are not damaged

Assembly for AVENTOS HF/HS/HL

Installation of SERVO-DRIVE activation switch

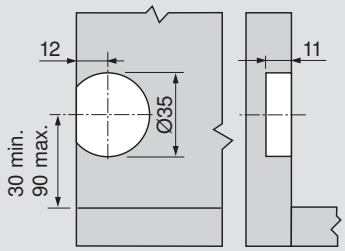

NOTE: Use of boring template (M31.2000) recommended, see page 99

The activation switch should be installed by pressing into the cabinet side with your hand. Do not use hammer to install.

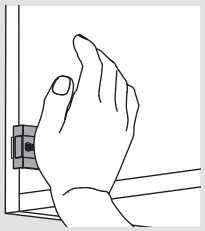

Installation of Blum distance bumpers

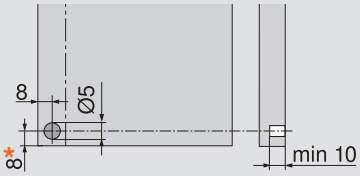

NOTE: The distance bumper should not touch the SERVO-DRIVE switch

For AVENTOS HF – install into door front. Use of six distance bumpers is recommended.

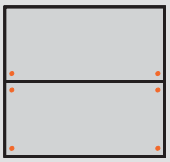

For AVENTOS HS/HL – install into door front. Use of four distance bumpers is recommended.

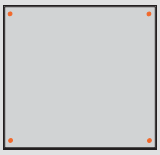

Drive unit preparation

Before SERVO-DRIVE for AVENTOS installation, the lift mechanism tension adjustment should be made and door operation balanced.

The AVENTOS arm assembly must be in the completely open position for drive unit installation. Attach the opening angle stop (if required) only **after** drive unit installation and **before** the reference run.

Use the lift mechanism selection switch to select the appropriate lift system application.

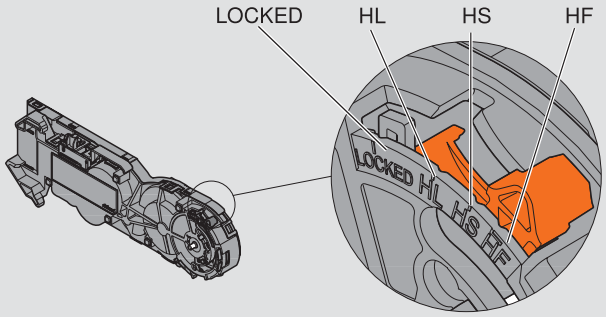

Installation of universal cable

1 Lift orange universal cable lock lever

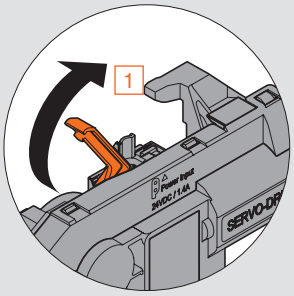

2 Insert universal cable (either end of the cable can be used)

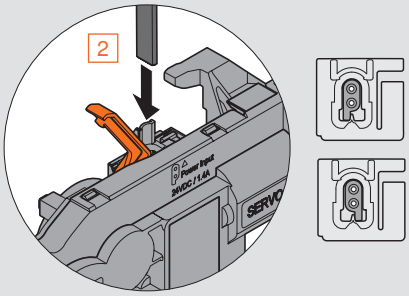

3 Once cable is inserted, press down on universal cable lock lever

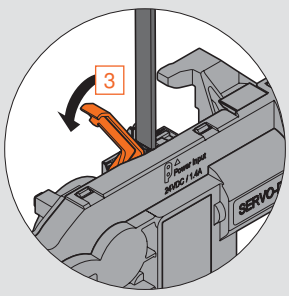

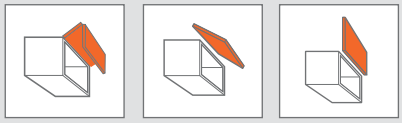

SERVO-DRIVE for AVENTOS

blum

Drive unit installation

1 Insert the drive unit into back of lift mechanism and slide forward

2 Position drive unit into front of lift mechanism with locator pin

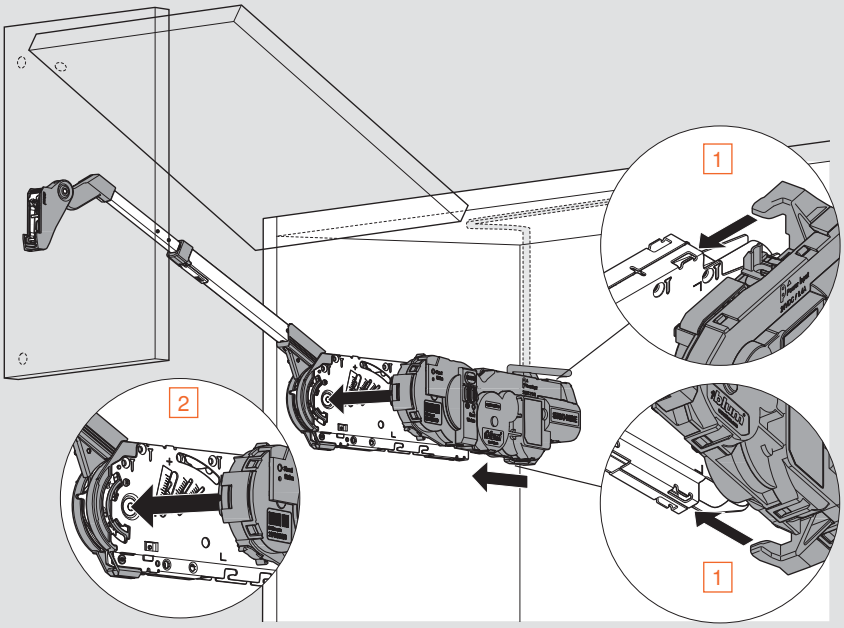

2A The drive unit can be locked when the orange slide is no longer visible in the view window.

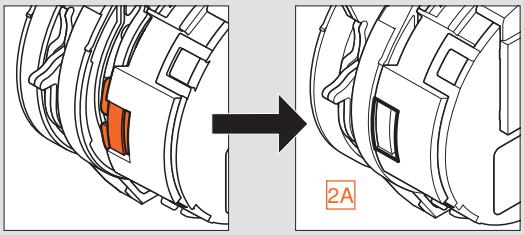

3 To lock drive unit to the lift mechanism, slide the lift mechanism selection switch to the locked position (reference noted positions on drive unit). There will be an audible click when locked.

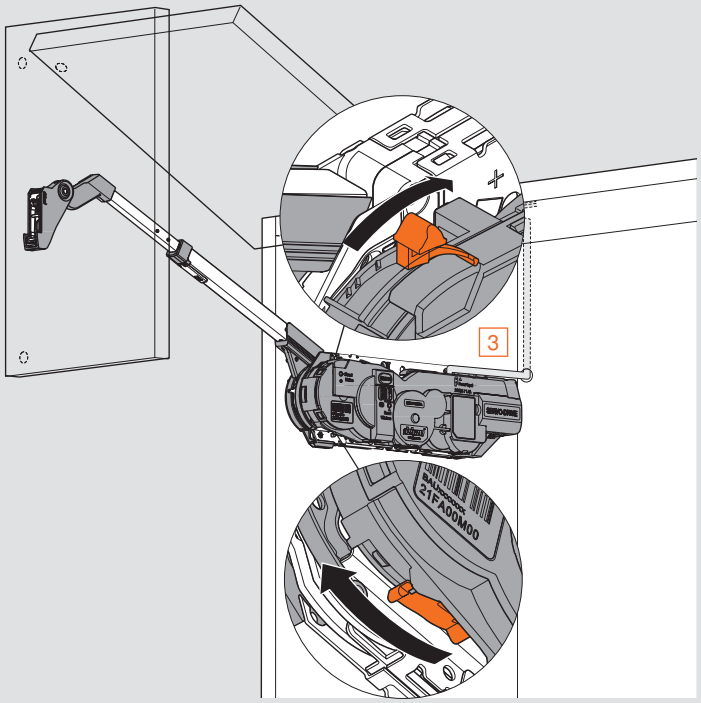

SERVO-DRIVE for AVENTOS

Overview of Functions

Start-Up

A Activating the SERVO-DRIVE switch

B Start reference run

Deactivation

E Reset Motion

F Reset Wireless

Additional Features

Optional

C Activating synchronization

D Activating collision avoidance

Function buttons layout

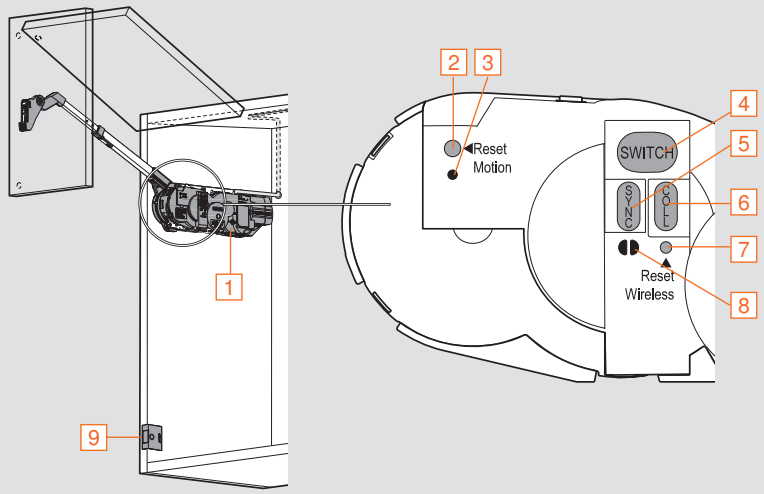

1. Drive unit
2. <Reset Motion> button
3. Motion LED
4. <SWITCH> button
5. <SYNC> button
6. <COLL> button
7. <Reset Wireless> button
8. Wireless LED
9. SERVO-DRIVE switch

Start-Up

A Activating the SERVO-DRIVE switch

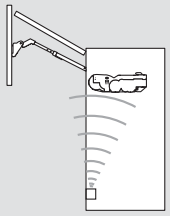

Operation

Lights up continuously

Flashes

Set up the wireless connection between the SERVO-DRIVE switch and the drive unit. Each switch can only be assigned to one SERVO-DRIVE unit.

NOTE: Up to 6 switches can be programmed to a single drive unit

1 Press and hold the <SWITCH> button until the LED flashes

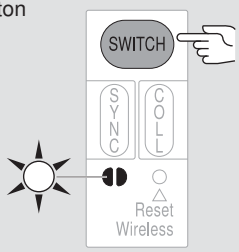

2 Press and hold the SERVO-DRIVE switch until the LED lights up continuously.

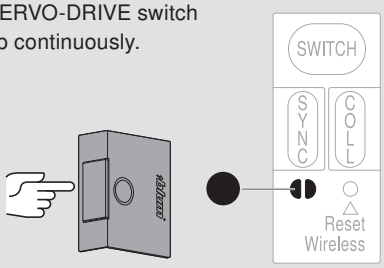

Repeat steps 1 and 2 for additional SERVO-DRIVE switches in the cabinet

Additional Features

Optional

C Activating synchronization

For instructions on activating synchronization, see page 96

D Activating collision avoidance

For instructions on activating collision avoidance, see page 96

B Start reference run

The drive unit recognizes the required parameters using the reference run, setting both upper and lower limits for the motion of the door.
A new reference run is required if original parameters change (tension/hardware adjustment, angle restriction installed).

1 Reference run is required: LED flashes orange

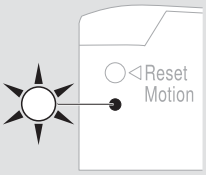

2 Close the front manually

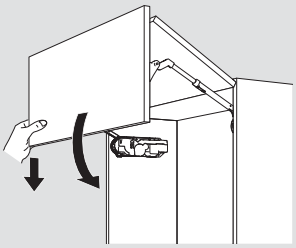

3 Press on front: The reference run starts automatically

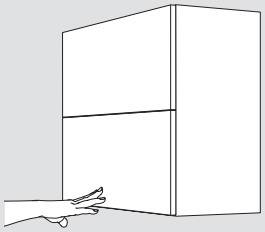

4 Front opens and closes two times automatically: under no circumstances should you try to manually interrupt or stop the process

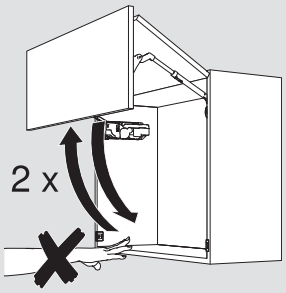

NOTE: If the reference run is interrupted, it should be reset. See reset motion on page 97 then restart reference run

C Activating synchronization

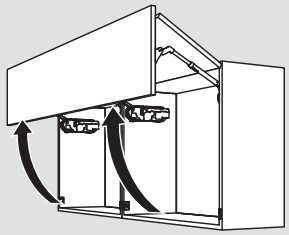

Up to three drive units can be synchronized allowing them to move simultaneously. This function is required for several cabinets with one wide front.

1 Press and hold the <SYNC> button on the 1st drive unit until the LED flashes

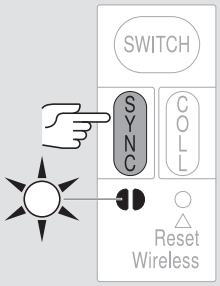

2 Press and hold <SYNC> on the 2nd drive unit until the LEDs on both synchronized drive units light up continuously

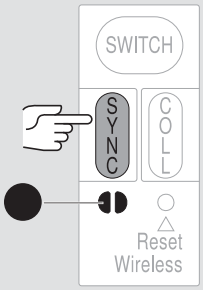

NOTE: Repeat steps 1 and 2 for all additional drive units

D Activating collision avoidance

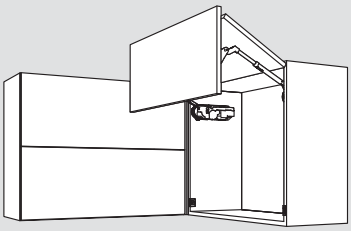

To avoid the collision of door fronts, drive units (six maximum) are linked so that only one door can be opened at a time. A door front is prevented from opening as long as a linked door front remains open.

1 Press and hold the <COLL> button on the 1st drive unit until the LED flashes

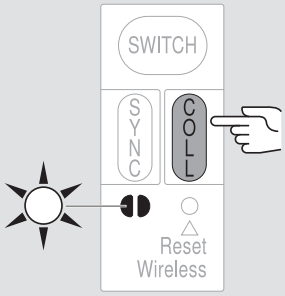

2 Close the door manually

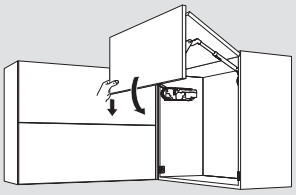

3 Manually open the door of the unit to be linked

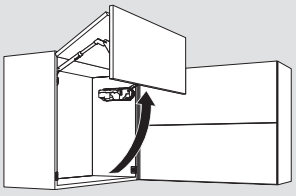

4 Press and hold <COLL> on the 2nd drive unit until the LED lights up continuously (the same will happen in the first cabinet)

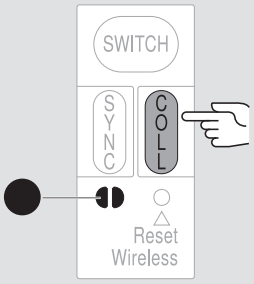

NOTE: Repeat steps 1 through 4 for all additional cabinets

E Reset motion

Resets the reference run and enables a new reference run to be started.

Flashes quickly

1 Press and hold the <Reset Motion> button using a pen (at least 3 seconds) until the LED flashes quickly

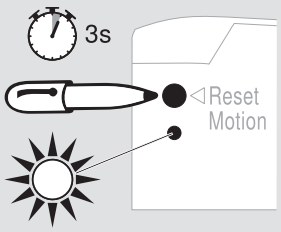

F Reset wireless

Deactivates all functions. All active SERVO-DRIVE switches, synchronization and collision avoidance settings for the respective drive unit are deleted.

1 Press and hold the <Reset Wireless> button using a pen (at least three seconds) until the LED flashes quickly

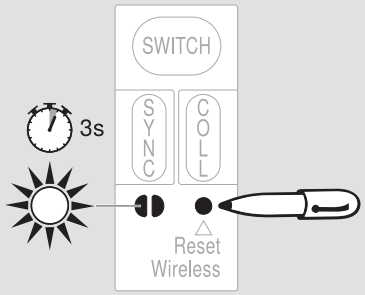

Motion LED signals		
	Flashes orange	Reference run is required
	Lights orange continuously	Power available
		Operating mode display
		Reference run successfully completed
	Flashes orange quickly	Reset motion confirmation

Wireless LED signals		
	Flashes green	Activation mode
	Lights up green continuously	Activation confirmation
	Flashes green quickly	Deactivation confirmation
	Lights up continuously red	Last process was not completed successfully

Cover Cap and Battery Replacement

Cover cap

1

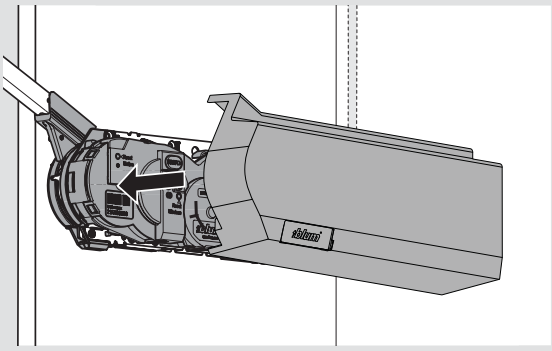

2

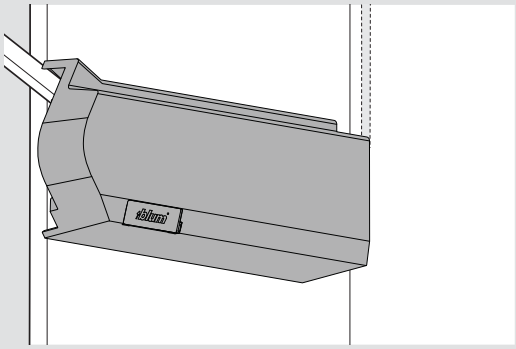

Replacing the SERVO-DRIVE switch battery

When the battery power begins to weaken, the battery display (LED) begins to flash red.
If the battery is inserted incorrectly, the SERVO-DRIVE switch battery display will flash red.

1. Press release button on switch and remove battery tray.

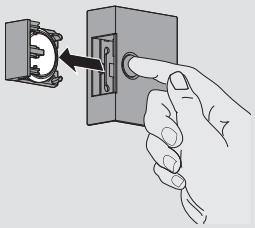

2. Remove old battery.

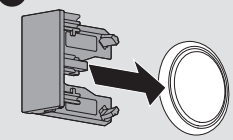

3. Replace with new battery.

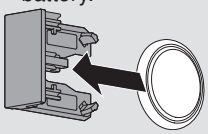

4. Insert battery tray back into switch.

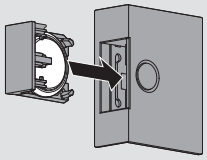

- Open the SERVO-DRIVE switch and remove the battery
- Insert the new battery (type CR2032) and close the SERVO-DRIVE switch
  - note correct plarity+/-

Note: The SERVO-DRIVE switch battery must not be recharged or discarded into fire.

SERVO-DRIVE switch boring template

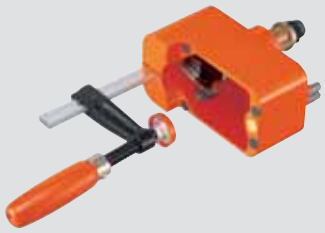

- For easy installation of SERVO-DRIVE for AVENTOS switch
- Clamp assembly for secure boring

Set includes:

- Ø**35** mm bit
- Torx driver bit (qty 2)

	Part no.
SERVO-DRIVE switch boring template	**M31.2000**

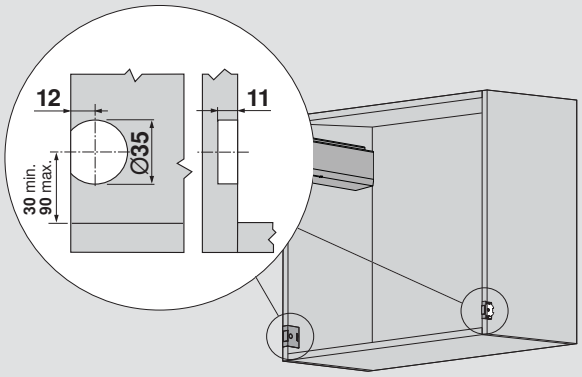

Mark switch location

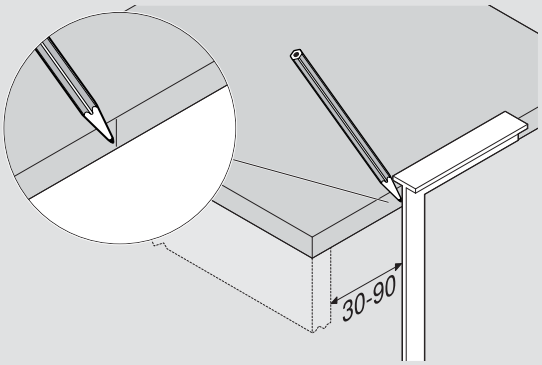

1. Set drilling depth
2. Align mark
3. Secure template to cabinet panel with clamp
4. Use provided Torx driver bit to bore hole

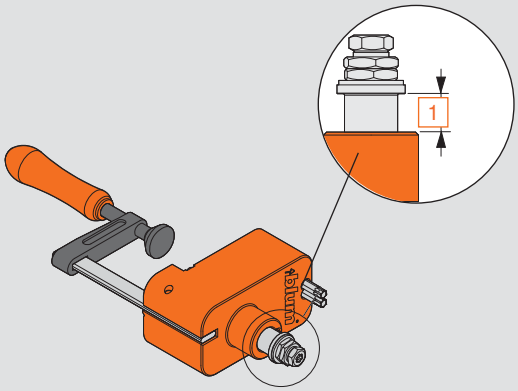

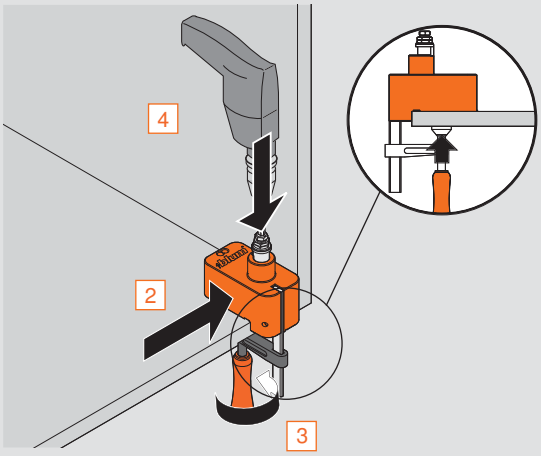

PLATEMATE

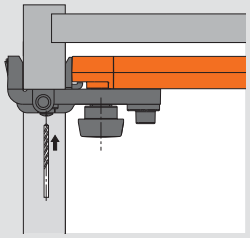

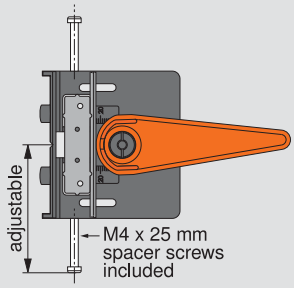

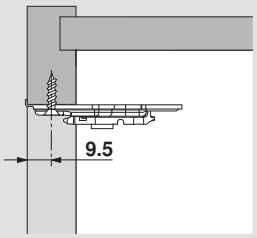

- Boring template for all Blum face frame adapter plates
- Clamps to the frame with cam lever
- Adjustment knob accomodates face frame thickness of 5/8" to 1"
- Spacer screws allow quick use without measuring

Set includes:

1. PLATEMATE template
2. **Ø.35** pilot bit and extension
3. **Ø5** stop collar

Also includes:

- Reversible bushing insert for **32** hole spacing for 175L6xxx
- Reversible bushing insert for **40** hold spacing for 175H6

	Part no.
Platemate	**65.5030.01**
Ø**2.5** drill bit	**DB-2.5mm R**

POZI DRIVER and bits

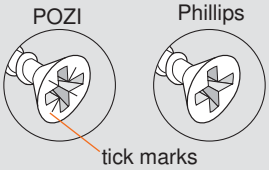

A POZI screwdriver (different from Phillips) is the most crucial tool you can use to assure that full torque is applied to all Blum mounting screws. POZI screws can be identified by the distinctive “tick” marks located in the center of the screw head recess.

	Part no.
#2 POZI DRIVER	**POZI DRIVER**
1/4" Magnetic bit holder	**BIT HOLDER**
#2 x 1" POZI bit insert	**POZI BIT #2x1**
#2 x 2" POZI bit insert	**POZI BIT #2x2**

Vix bit

For use in handheld drills

	Part no.
Ø**3** piloting bit	**VPB-5**

Deep thread wood screw

Use to attach mounting plates to doors

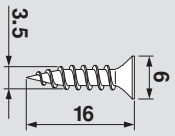

	Part no.
#6 x **16**, Phillips	**606N**
#6 x **16**, Pozi	**606P**

Fine thread aluminum screw

Use to attach mounting plates to wide frame aluminum doors

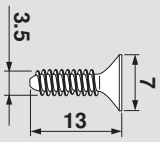

	Part no.
#7 x **13** fine thread	**7072A**

Deep thread aluminum screw

Use to attach mounting plates to narrow frame aluminum doors

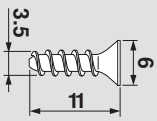

	Part no.
#6x**11** deep thread	**699.110**

Universal individual template

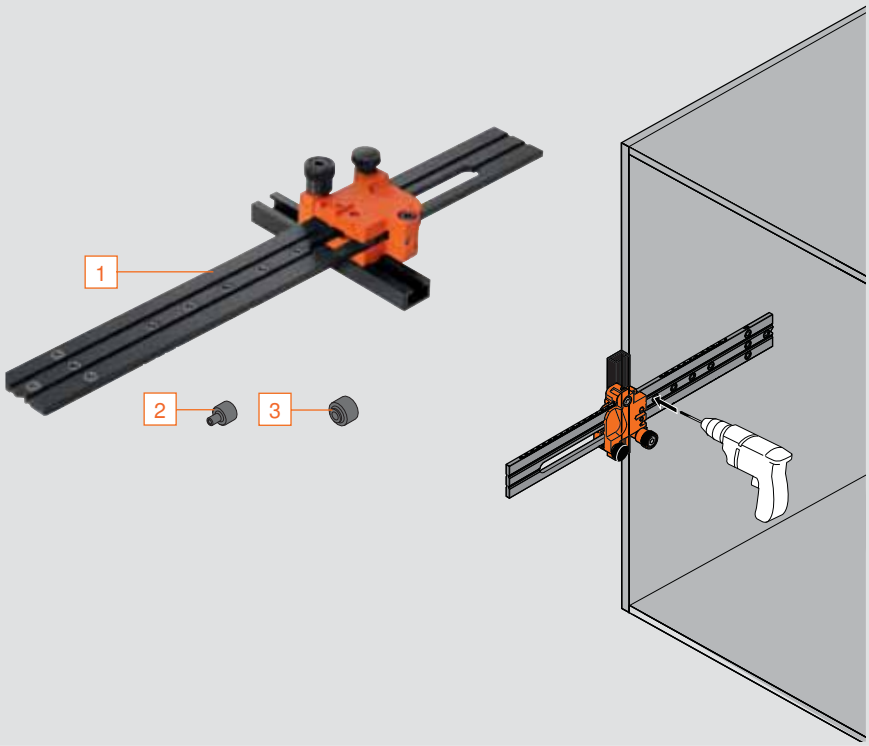

- Used to pre-bore for AVENTOS lift mechanism locating pins
- Also used for pre-boring for cabinet profiles and BLUMOTION for doors and TIP-ON for doors adapter plates
- Calibrated scale for accurate setting

Set includes:

1. Universal individual template
2. Ø**2.5** stop collar
3. Ø**5** stop collar

	Part no.
Template	**65.1051.02**
Ø**2.5** drill bit	**DB-2.5mm R**
Ø**5** drill bit	**DB-5mm R**

Universal boring template

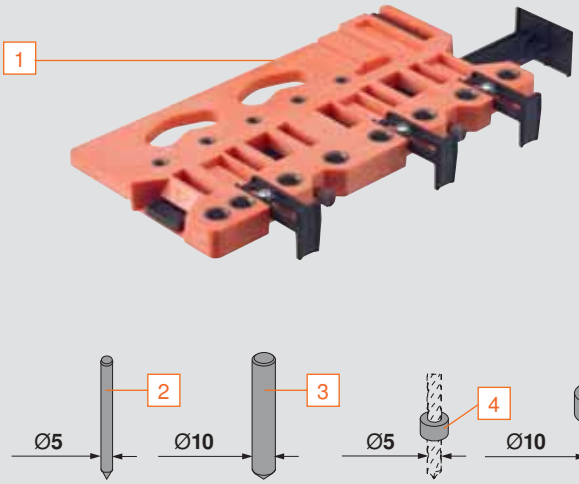

- Used to pre-bore for AVENTOS telescopic arm and arm assembly mounting plates
- Can also be used to pre-bore for drawer fronts, bottoms and backs for METABOX, TANDEMBOX, and LEGRABOX drawer systems

Set includes:

1. Template
2. Ø**5** marking pin
3. Ø**10** marking pin
4. Ø**5** stop collar
5. Ø**10** stop collar

	Part no.
Universal template	**ZML.0040.01**
Ø**5** drill bit	**DB-5mm R**

AVENTOS Part Number Index

SERVO-DRIVE for AVENTOS Part Number Index

Notes

Connect With Us on Social Media

Be sure to connect with us on social media for additional resources for information regarding tips on installation, maximizing storage space, new products and other news and events going on inside Blum.

Find us by searching **"Blum USA"** in the search bar.


blum

Why Choose Blum

The Blum name stands for quality, innovation and great customer service. We manufacture hardware that makes working in the kitchen easier, no matter the age of the user, and we do this globally. We've been in the United States for more than 40 years, and we are committed to manufacturing for the American market. Blum supports the United States market with a network of distributors, knowledgeable Blum sales representatives and an experienced customer service department. Each of our products has been designed carefully, with the customer experience in mind. We have a deep commitment to research and believe anyone who manufactures, sells, installs or uses our products should benefit from our knowledge and experience. We specialize in engineering and manufacturing concealed hinges, drawer systems and systems for lift-up doors. From our touch-to-open technology, to the soft-closing door or drawer, our hardware helps modernize the kitchen experience.

To learn more about Blum, visit blum.com/tour

ISO 9001
Certified Quality System

Blum, Inc. is ISO 9001 certified which means that you are assured of consistent quality in every Blum product. They exceed the requirements of ANSI/BHMA standards for cycle life, static load and self-closing performance.

Blum, Inc.
7733 Old Plank Rd.
Stanley, NC 28164
800-438-6788
blum.com

FSC LOGO

ISO 9001
Certified Quality
System

blum®